MAD CREEK
MUSCATINE, IOWA
SECTION 205
LOCAL FLOOD PROTECTION

US Army Corps of Engineers
Rock Island District

THIS PROJECT WAS DESIGNED BY THE ROCK ISLAND DISTRICT OF THE U.S. ARMY CORPS OF ENGINEERS. THE INITIALS OR SIGNATURES AND REGISTRATION DESIGNATIONS OF INDIVIDUALS APPEAR ON THESE PROJECT DOCUMENTS WITHIN THE SCOPE OF THEIR EMPLOYMENT AS REQUIRED BY ER 1110 - 1 - 8152. SIGNATURES AFFIXED BELOW INDICATE OFFICIAL RECOMMENDATION AND APPROVAL OF ALL DRAWINGS IN THIS SET AS INDICATED ON EACH INDIVIDUAL TITLE BLOCK.

Symbol	Description	Date	Appr.
	Revisions		

Reviewed by:
Chief, Design Branch — Date
Chief, Hydraulics Branch — Date
Chief, Geotechnical Branch — Date

Recommended by:
Chief, Engineering Division — Date
Approved by:
Col., Corps of Engineers — Date

U.S. ARMY ENGINEER DISTRICT
CORPS OF ENGINEERS
ROCK ISLAND, ILLINOIS

Designed By:	RET	Date:	XX XXX 01
Drawn By:	RTR	Scale:	AS SHOWN
Checked By:	XYZ	Project Code:	MU05
Reviewed By:	RAL	Solicitation Number:	DACW25-XX-B-XXXX

MAD CREEK
MUSCATINE, IOWA
SECTION 205
LOCAL FLOOD PROTECTION

COVER SHEET

Sheet Reference Number:
X101
Sheet 1 of 19

27-JUN-2002 08:54
e:\projects\mu05\mu05x101.dgn
RTR 6-21-02

INDEX OF DRAWINGS

SHEET REFERENCE NO.	SHEET NO.	TITLE OF DRAWING
		GENERAL DRAWINGS
X101	1	COVER SHEET
X102	2	INDEX OF DRAWINGS
X103	3	GENERAL PLAN - LEVEE AND FLOODWALL IMPROVEMENTS
X104	4	BORROW AND DISPOSAL SITES
		CIVIL DRAWINGS
C101	5	BORING LOGS
C102	6	PLAN AND PROFILE STA. 3+00A TO STA. 13+00
C103	7	PLAN AND PROFILE STA. 13+00 TO STA. 26+00
C104	8	PLAN AND PROFILE STA. 26+00 TO STA. 36+00
C105	9	PLAN AND PROFILE STA. 36+00 TO STA. 42+00
C106	10	TYPICAL SECTIONS
C107	11	CHANNEL IMPROVEMENT
		STRUCTURAL DRAWINGS
		SECOND ST. VERTICAL GATE CLOSURE
S101	12	PLAN AND PROFILE
		I & M RAIL LINK RAILROAD CLOSURE
S201	13	PLAN AND PROFILE
S202	14	I - WALL DETAILS
S203	15	GATE DETAILS
		MISSISSIPPI DRIVE CLOSURE
S301	16	MASONRY DETAILS
S302	17	BULKHEAD DETAILS
		MISCELLANEOUS STRUCTURES
S401	18	NEW I - WALL DETAILS
S501	19	GATEWELL EXTENSION DETAILS

SHEET REFERENCE NO.	SHEET NO.	TITLE OF DRAWING

US Army Corps of Engineers
Rock Island District

Symbol	Description	Date	Approved

Revisions

Designed By: RET	Date: XX XXX 01	U.S. ARMY ENGINEER DISTRICT CORPS OF ENGINEERS ROCK ISLAND, ILLINOIS	
Drawn By: RTR	Scale: AS SHOWN		
Checked By: XYZ	Project Code: MU05		
Reviewed By: RAL	Solicitation Number: DACW25-XX-B-XXXX		

MAD CREEK
MISCELLANEOUS, IOWA
LOCAL FLOOD PROTECTION

INDEX OF DRAWINGS

Sheet Reference Number:
X102
Sheet 2 of 19

27-JUN-2002 08:54
e:\projects\mu05\mu05x102.dgn
RTR 6-21-02

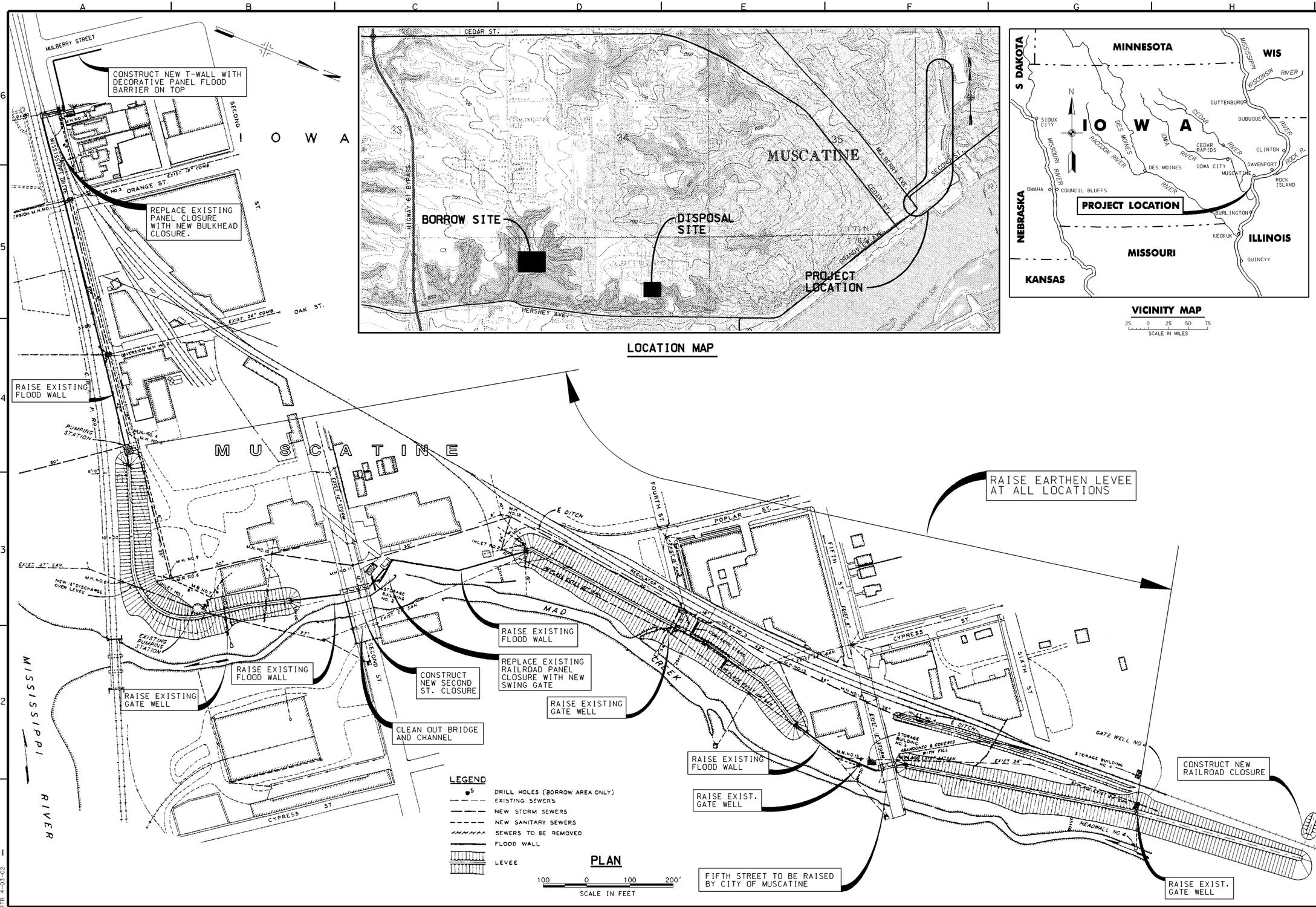

LOCATION MAP

VICINITY MAP

SCALE IN MILES

US Army Corps of Engineers Rock Island District

Symbol	Description	Date	Approved
	Revisions		

U.S. ARMY ENGINEER DISTRICT
CORPS OF ENGINEERS
ROCK ISLAND, ILLINOIS

Designed By:	RET	Date:	XX XXX 01
Drawn By:	RTR	Scale:	AS SHOWN
Checked By:	XYZ	Project Code:	MU05
Reviewed By:	RAL	Solicitation Number:	DACW25-XX-B-XXXX

MAD CREEK
MUSCATINE, IOWA
SECTION 205
LOCAL FLOOD PROTECTION

GENERAL PLAN
LEVEE AND FLOODWALL IMPROVEMENTS

Sheet Reference Number:
X103
Sheet 3 of 19

27-JUN-2002 08:47
e:\projects\mu05\mu05x103.dgn
RTR 4-03-02

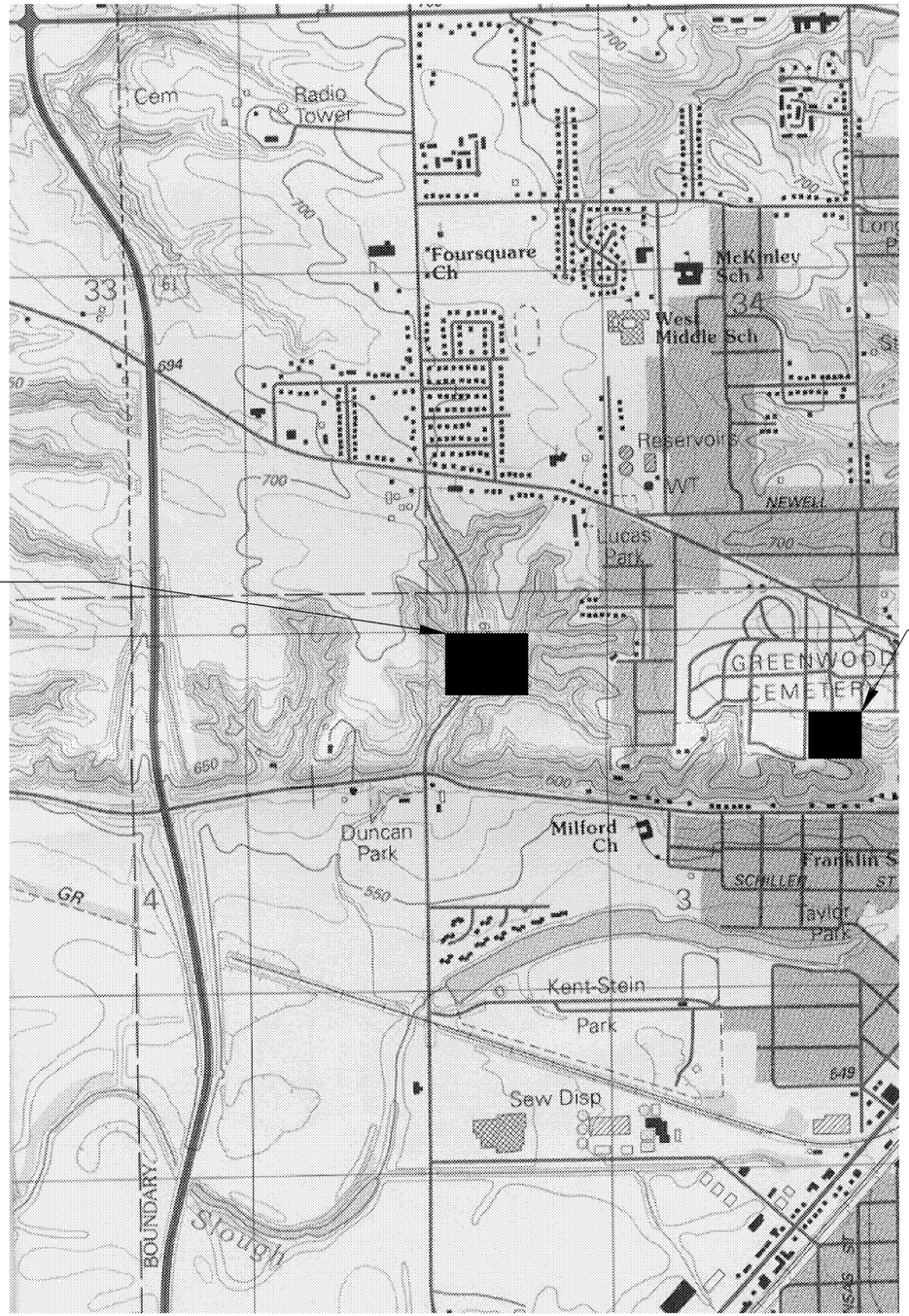

BORROW SITE

IMPERVIOUS MATERIAL FOR EMBANKMENT CONSTRUCTION TO BE OBTAINED FROM THIS LOCATION ON HERSHEY AVENUE.

DISPOSAL SITE

EXCAVATED MATERIAL FROM THE MAD CREEK CHANNEL IMPROVEMENT AND SECOND STREET BRIDGE CLEAN OUT TO BE DISPOSED OF AT THIS ACTIVE CITY CONSTRUCTION DISPOSAL SITE IN GREENWOOD CEMETERY.

US Army Corps of Engineers
Rock Island District

Symbol	Description	Date	Approved

Revisions

Designed By:	RET
Drawn By:	DWP
Checked By:	XYZ
Reviewed By:	RAL
Date:	XX XXX 01
Scale:	AS SHOWN
Project Code:	MU05
Solicitation Number:	DACW25-XX-B-XXXX

U.S. ARMY ENGINEER DISTRICT
CORPS OF ENGINEERS
ROCK ISLAND, ILLINOIS

MAD CREEK IOWA
MUSCATINE, IOWA
LOCAL FLOOD PROTECTION

BORROW AND DISPOSAL SITES

Sheet Reference Number:
X104
Sheet 4 of 19

27-JUN-2002 08:46
e:\projects\mu05\mu05x104.dgn
RTR 3-12-02

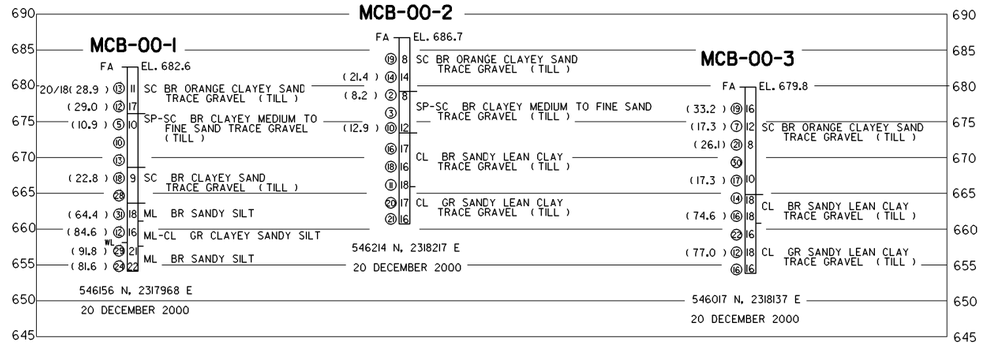

MAD CREEK BORROW AREA

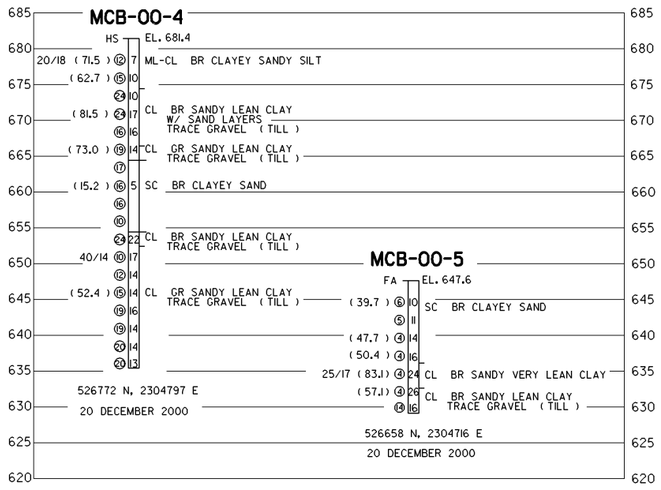

HERSHEY AVENUE BORROW AREA

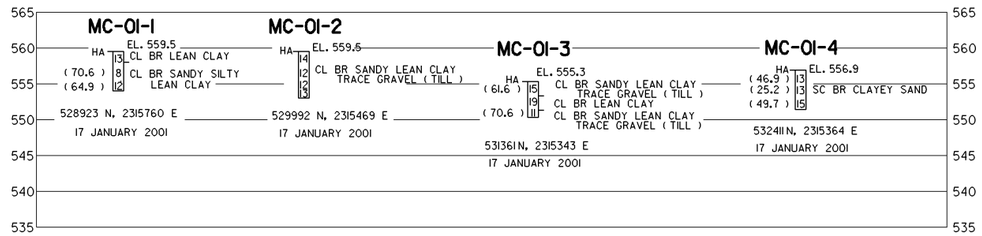

MAD CREEK LEVEE BORINGS

LEGEND:

◉ INDICATES BORING ON LOCATION PLAN

JFS-99-3 BORING NUMBER

HOLE ADVANCED USING :
3¼" HOLLOW STEM AUGER
4" HAND AUGER
4" FLIGHT AUGER

WATER LEVEL (WHEN ENCOUNTERED)

PERCENT PASSING #200 SIEVE (12.0)

LIQUID AND PLASTIC LIMIT 35/16

NUMBER OF BLOWS TO DRIVE 2 INCH DIA SPLIT SPOON ONE FOOT USING 140 LB HAMMER AND 30 INCH DROP (23)

HS TOP ELEVATION IN FEET
HA
FA
WL MAJOR STRATA BREAK
MINOR STRATA BREAK
23 NATURAL MOISTURE CONTENT IN PERCENT DRY WEIGHT

LOCATION OF BORING
DATE OF DRILLING

NOTES:

1. BLOW COUNTS OBTAINED WITH CME AUTO HAMMER REFER TO ETL-1110-1-138.

NOTES:

1. BORING ELEVATION SHOWN ON THIS DRAWING ARE BASED ON THE NATIONAL GEODETIC VERTICAL DATUM OF 1929.
2. LOCATION COORDIATES ARE ACCORDING TO IOWA STATE PLANE, SOUTH ZONE, NAD 83, IN FEET.

US Army Corps of Engineers Rock Island District

Revisions			
Symbol	Description	Date	Approved

Designed By:	RET
Drawn By:	RTR
Checked By:	XYZ
Reviewed By:	RAL
Done:	XX XXX 01
Scale:	AS SHOWN
Project Code:	MU05
Solicitation Number:	DACW25-XX-B-XXXX

U.S. ARMY ENGINEER DISTRICT
CORPS OF ENGINEERS
ROCK ISLAND, ILLINOIS

MAD CREEK
MUSCATINE, IOWA
LOCAL FLOOD PROTECTION

BORING LOGS

Sheet Reference Number:
C101
Sheet 5 of 19

27-JUN-2002 08:46
e:\projects\mu05\mu05c101.dgn
RTR 4-02-02

STA. 2+85A
BEGIN NEW CONSTRUCTION

P.I. STA. 1+70A

P.T. STA. 0+53A

C102 C-106

Storage Bldg.

REPLACE EXISTING PANEL CLOSURE WITH NEW BULKHEAD CLOSURE AND T-WALL

NEW BULKHEAD STORAGE AREA

NEW T-WALL AND TH PANEL

FRONT ST.

Blacktop

Cable Guard Rail (to be removed by others)

See "Detail A"

12" C.M.P.

Underground Telegraph cable from this pole downstream

CONTROL LINE

Twin Battery Well

X BM R455
EL. 557.40 CONC. MON.

RAISE EXISTING REINFORCED CONCRETE FLOOD WALL

Loose Surface Parking Lot

Limits of Work Area

RAISE EXISTING REINFORCED CONCRETE FLOOD WALL

REPLACE EXISTING PANEL CLOSURE WITH NEW BULKHEAD CLOSURE AND T-WALL. SEE SHEETS S301 AND S302 FOR DETAILS.

NEW T-WALL WITH PANELS

Riprap

Marine Railway

MISSISSIPPI RIVER

EXISTING PUMP STATION. NO WORK REQUIRED

Relocation of powerline and service to pumping station to be by others

Cinder Road

Crushed Rock

Transf. Poles

CURVE DATA
Δ- 99°18'50"
T- 147.22'
L- 216.71'
R-125.0'

P.I. 13+97.0 I.P.

P.T. 12+80.31 I.P.

MATCH LINE STA. 13+00

RAISE EXISTING EARTHEN LEVEE

E of Levee

Trench Drain

Gabions

Riprap for Plan

MAD CREEK

New pressure sewer line built by city 1959

Abandoned

PLAN
SCALE IN FEET

ML
ML-sand
ML-CL
WT
SM
SM(ns)

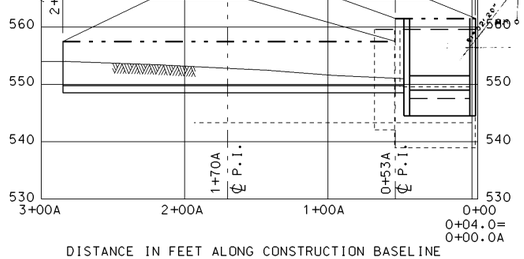

DISTANCE IN FEET ALONG CONSTRUCTION BASELINE

PROFILE

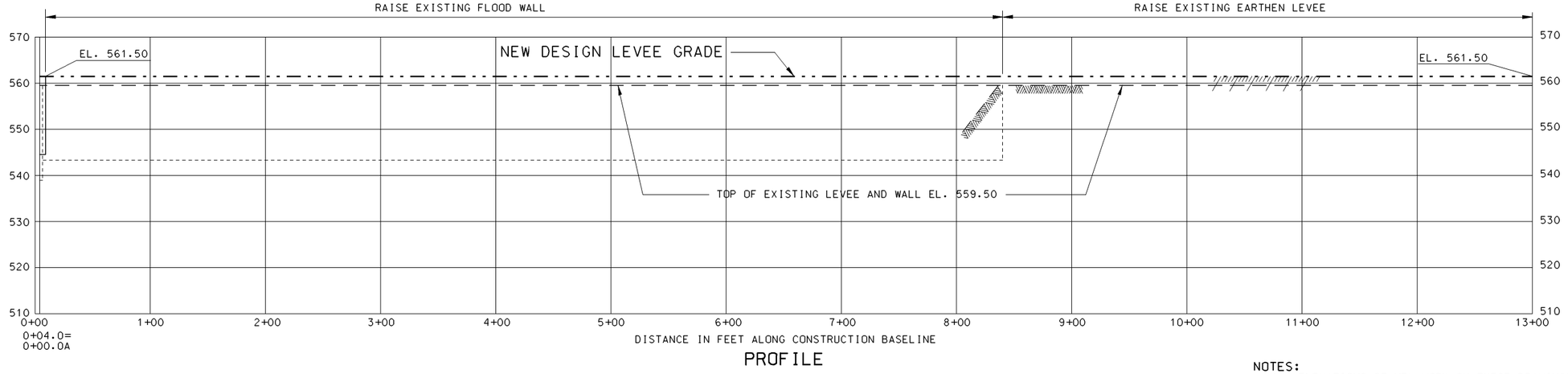

DISTANCE IN FEET ALONG CONSTRUCTION BASELINE

PROFILE

NOTES:
1. ELEVATIONS OF NEW WORK ON THESE DRAWINGS IS BASED ON THE NATIONAL GEODETIC VERTICAL DATUM OF 1929.

US Army Corps of Engineers
Rock Island District

Symbol	Description	Date	Approved
	Revisions		

Designed By:	RET
Drawn By:	RTR
Checked By:	XYZ
Reviewed By:	RAL
Date:	XX XXX 01
Scale:	AS SHOWN
Project Code:	MU05
Solicitation Number:	DACW25-XX-B-XXXX

U.S. ARMY ENGINEER DISTRICT
CORPS OF ENGINEERS
ROCK ISLAND, ILLINOIS

MAD CREEK
MUSCATINE, IOWA
LOCAL FLOOD PROTECTION

PLAN AND PROFILE STA. 3+00A TO STA. 13+00

Sheet Reference Number:
C102
Sheet 6 of 19

27-JUN-2002 08:45
e:\projects\mu05\mu05c102.dgn
RTR 6-20-02

REFERENCES:
1. FOR BORING LOGS, SEE SHEET C101.
2. FOR DETAILS OF SECOND ST. CLOSURE STRUCTURE, SEE SHEETS S101.

NOTES:
1. ELEVATIONS OF NEW WORK ON THESE DRAWINGS ARE BASED ON THE NATIONAL GEODETIC VERTICAL DATUM OF 1929.

US Army Corps of Engineers
Rock Island District

Symbol	Description	Date	Approved
	Revisions		

Designed By: RET	Date: XX XXX 01
Drawn By: RTR	Scale: AS SHOWN
Checked By: XYZ	Project Code: MU05
Reviewed By: RAL	Solicitation Number: DACW25-XX-B-XXXX

U.S. ARMY ENGINEER DISTRICT
CORPS OF ENGINEERS
ROCK ISLAND, ILLINOIS

MAD CREEK
MUSCATINE, IOWA
SECTION 205
LOCAL FLOOD PROTECTION

PLAN AND PROFILE STA. 13+00 TO STA. 26+00

Sheet Reference Number: **C103**
Sheet 7 of 19

27-JUN-2002 08:44
e:*projects*mu05*mu05c103.dgn
RTR 6-20-02

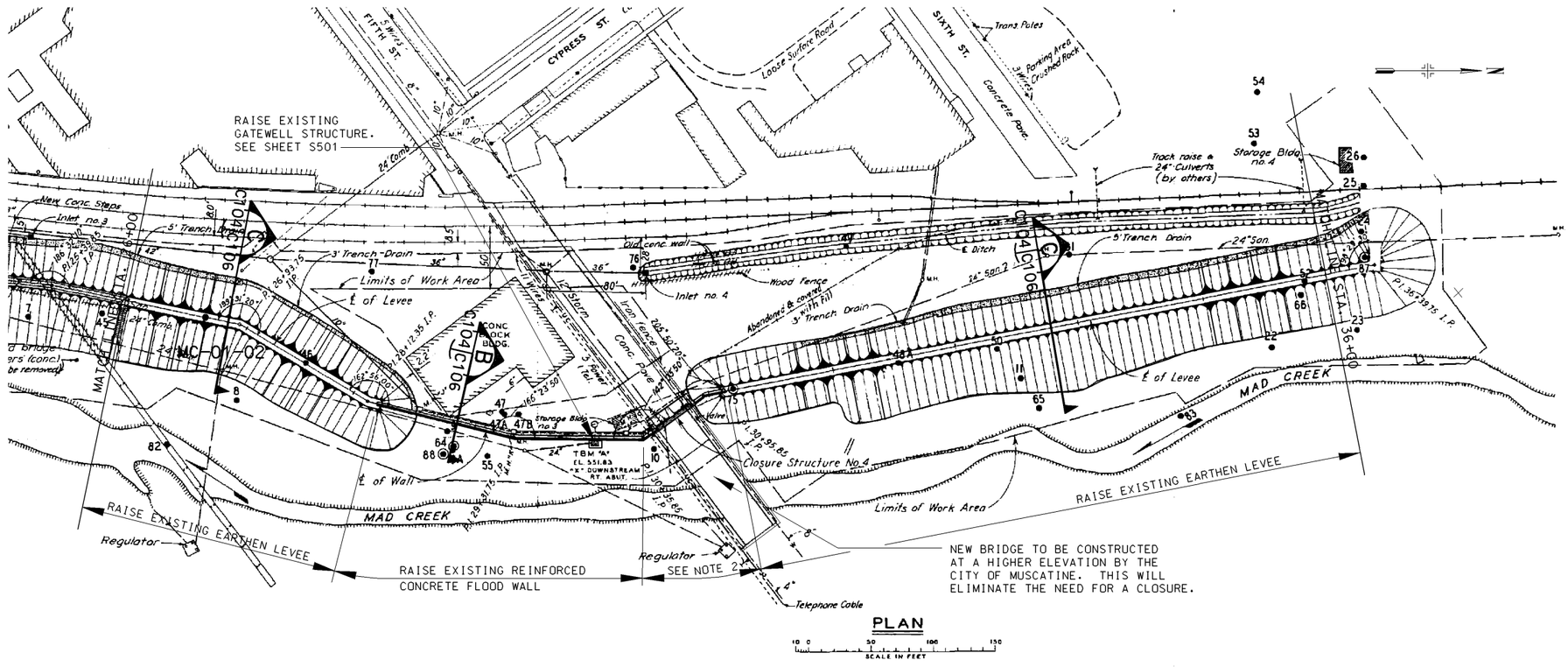

PLAN

SCALE IN FEET 10 0 50 100 150

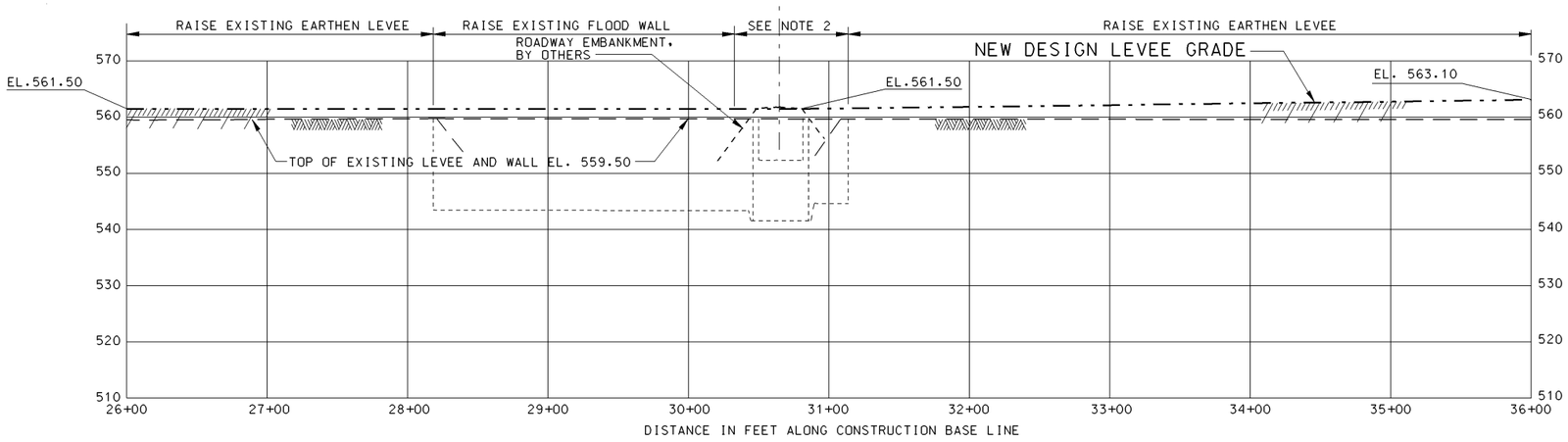

PROFILE

REFERENCES:

1. FOR BORING LOGS, SEE SHEET C101.

NOTES:

1. ELEVATIONS OF NEW WORK ON THESE DRAWINGS ARE BASED ON THE NATIONAL GEODETIC VERTICAL DATUM OF 1929.
2. THE FIFTH ST. ROADWAY IS TO BE RAISED AND THE BRIDGE RECONSTRUCTED AT A HIGHER ELEVATION BY THE CITY.

US Army Corps of Engineers Rock Island District

Symbol	Description	Date	Approved
	Revisions		

Designed By: RET	Drawn By: RTR	Checked By: XYZ	Reviewed By: RAL
Date: XX XXX 01	Scale: AS SHOWN	Project Code: MU05	Solicitation Number: DACW25-XX-B-XXXX

U.S. ARMY ENGINEER DISTRICT CORPS OF ENGINEERS ROCK ISLAND, ILLINOIS

MAD CREEK, IOWA
MUSCATINE, IOWA
LOCAL FLOOD PROTECTION

PLAN AND PROFILE STA. 26+00 TO STA. 36+00

Sheet Reference Number: C104
Sheet 8 of 19

27-JUN-2002 08:44
e:\projects\mu05\mu05c104.dgn
RTR 6-20-02

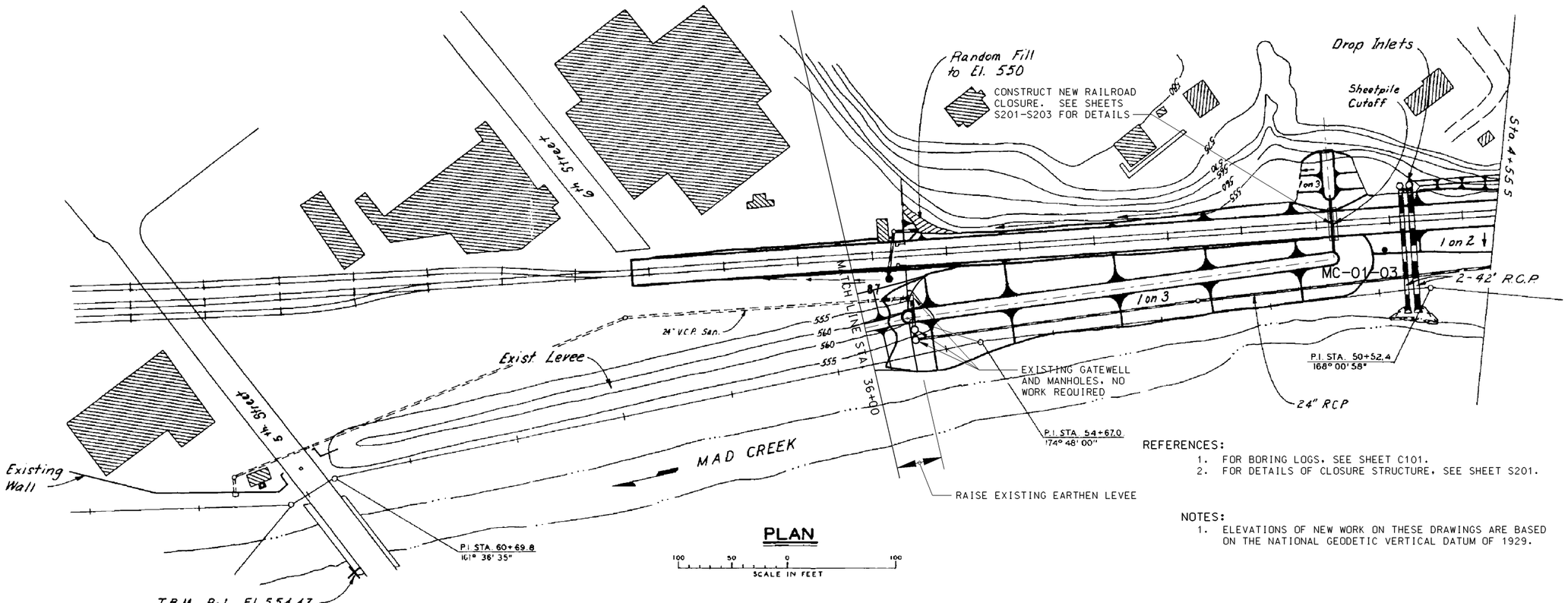

PLAN

REFERENCES:

1. FOR BORING LOGS, SEE SHEET C101.
2. FOR DETAILS OF CLOSURE STRUCTURE, SEE SHEET S201.

NOTES:

1. ELEVATIONS OF NEW WORK ON THESE DRAWINGS ARE BASED ON THE NATIONAL GEODETIC VERTICAL DATUM OF 1929.

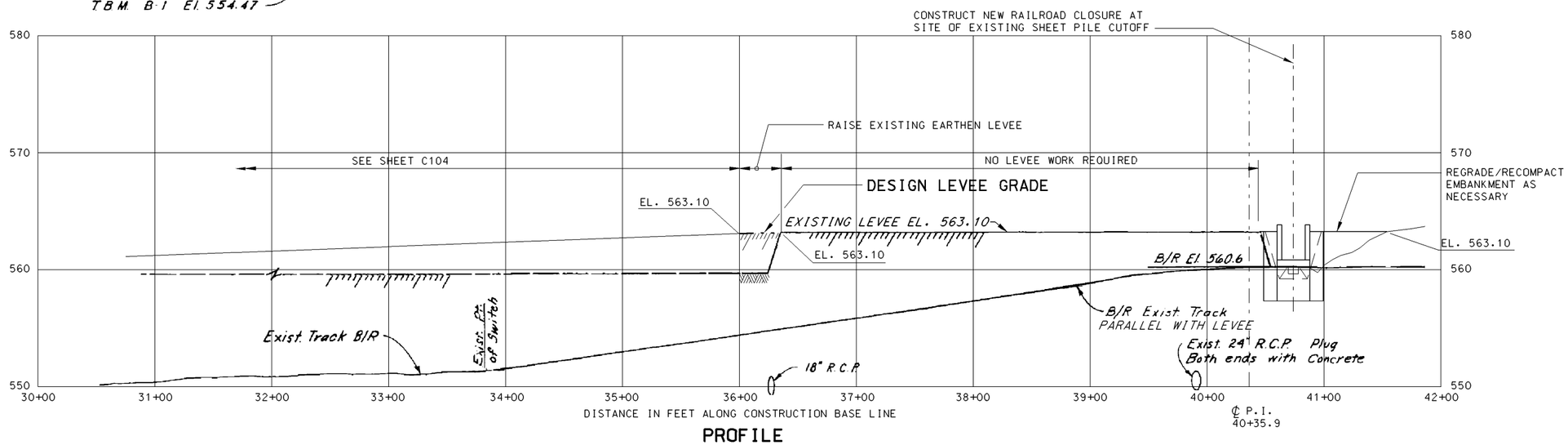

PROFILE

US Army Corps of Engineers Rock Island District

Symbol	Description	Date	Approved
	Revisions		

Designed By:	RET
Drawn By:	RTR
Checked By:	XYZ
Reviewed By:	RAL
Date:	XX XXX 01
Scale:	AS SHOWN
Project Code:	MU05
Solicitation Number:	DACW25-XX-B-XXXX

U.S. ARMY ENGINEER DISTRICT
CORPS OF ENGINEERS
ROCK ISLAND, ILLINOIS

MAD CREEK
MUSCATINE, IOWA
LOCAL FLOOD PROTECTION

PLAN AND PROFILE STA. 36+00 TO STA. 42+00

Sheet Reference Number:
C105
Sheet 9 of 19

27-JUN-2002 08:43
e:\projects\mu05\mu05c105.dgn
RTR 6-20-02

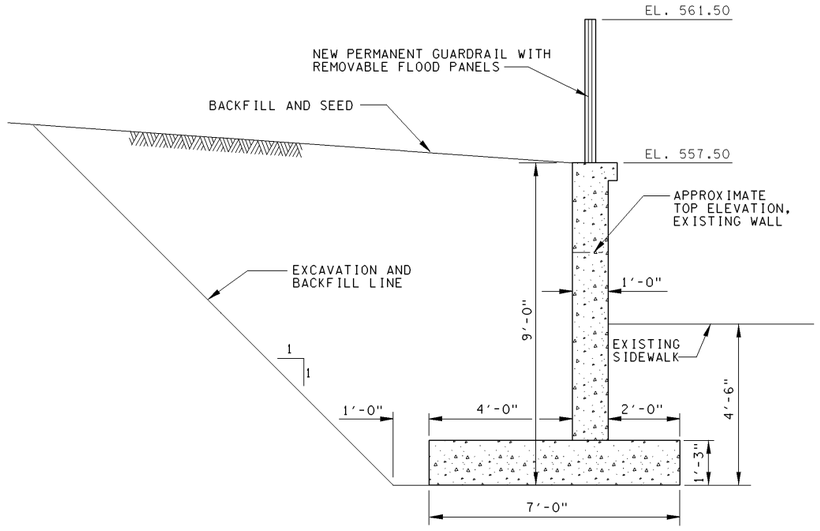

A TYPICAL T-WALL WITH PANELS

C102 | C106 STA. 0+53A TO STA. 2+85A

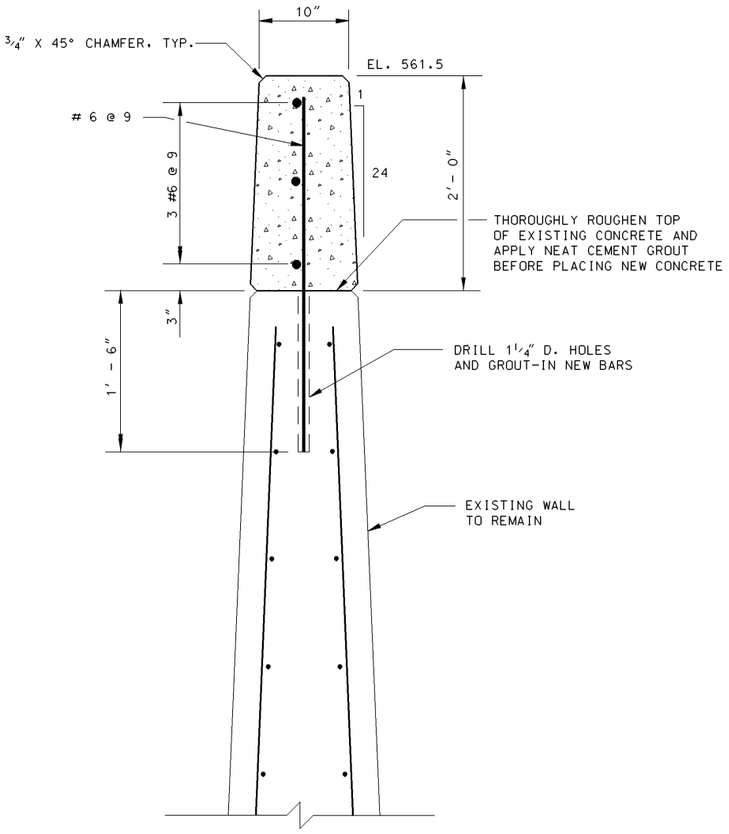

B TYPICAL I-WALL RAISE

C103 | C106 C102 | C106 STA. 0+10 TO STA. 8+39
STA. 14+87 TO STA. 15+42
STA. 17+01 TO STA. 17+26
STA. 17+55 TO STA. 20+78
STA. 28+20 TO STA. 30+46

1 0 1 2
SCALE IN FEET

1 0 1 2
SCALE IN FEET

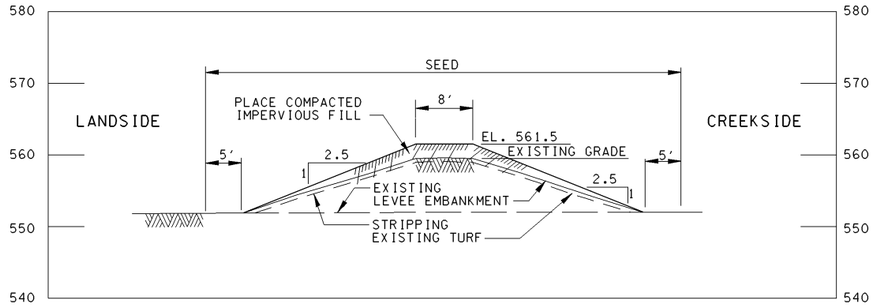

C TYPICAL LEVEE RAISE

C104 | C106 C103 | C106 C102 | C106 STA. 8+35 TO STA. 14+91
STA. 20+75 TO STA. 28+24
STA. 30+80 TO STA. 36+40

10 0 10
SCALE IN FEET

NOTES:

1. ELEVATIONS OF NEW WORK ON THESE DRAWINGS ARE BASED ON THE NATIONAL GEODETIC VERTICAL DATUM OF 1929.
2. THE METHOD OF ATTACHING CONCRETE FORMS TO THE EXISTING WALL SHALL BE APPROVED BY THE CORPS OF ENGINEERS. ANY RESULTING HOLES SHALL BE FILLED AND THE WALL SURFACE FULLY RESTORED TO PRE-CONSTRUCTION CONDITIONS.
3. WATERSTOPS AT EXISTING MONOLITH JOINTS SHALL BE SPLICED AND EXTENDED TO THE TOP OF THE WALL EXTENSION. THE CONTRACTOR SHALL SUBMIT DETAILS FOR APPROVAL.

US Army Corps of Engineers
Rock Island District

Symbol	Description	Date	Approved
	Revisions		

Designed By: RET	Drawn By: RTR	Checked By: XYZ	Reviewed By: RAL
Date: XX XXX 01	Scale: AS SHOWN	Project Code: MU05	Solicitation Number: DACW25-XX-B-XXXX

U.S. ARMY ENGINEER DISTRICT
CORPS OF ENGINEERS
ROCK ISLAND, ILLINOIS

MAD CREEK
MUSCATINE, IOWA
LOCAL FLOOD PROTECTION

TYPICAL SECTIONS

Sheet Reference Number:
C106
Sheet 10 of 19

27-JUN-2002 08:42
e:\projects\mu05\mu05c106.dgn
RTR 6-21-02

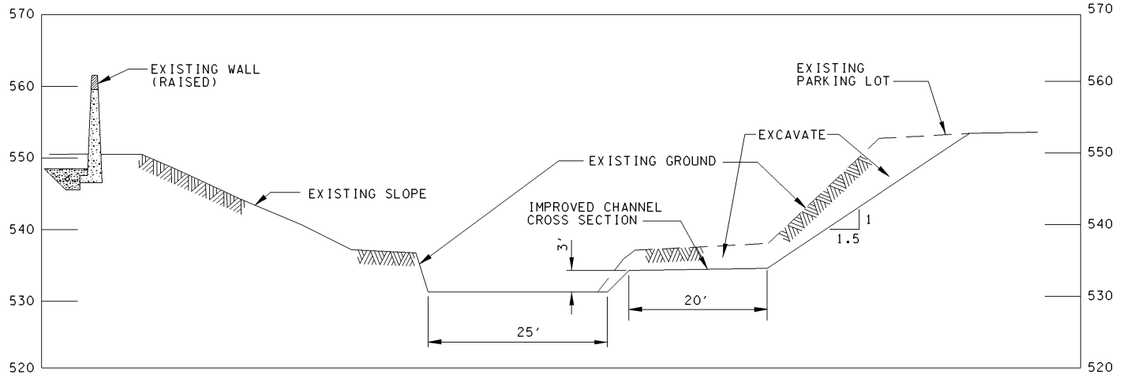

CHANNEL IMPROVEMENT UPSTREAM FROM SECOND STREET BRIDGE AT PARKING LOT

D
C103 C107

100 0 100 200'
SCALE IN FEET

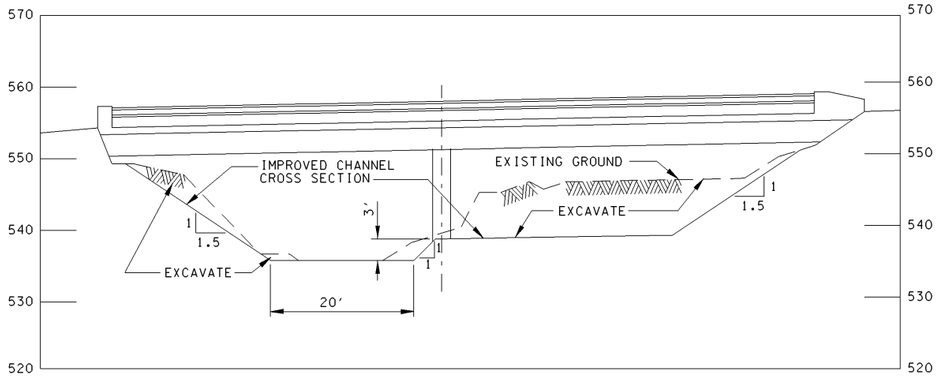

SECOND STREET BRIDGE CLEANOUT

E
C102 C107

100 0 100 200'
SCALE IN FEET

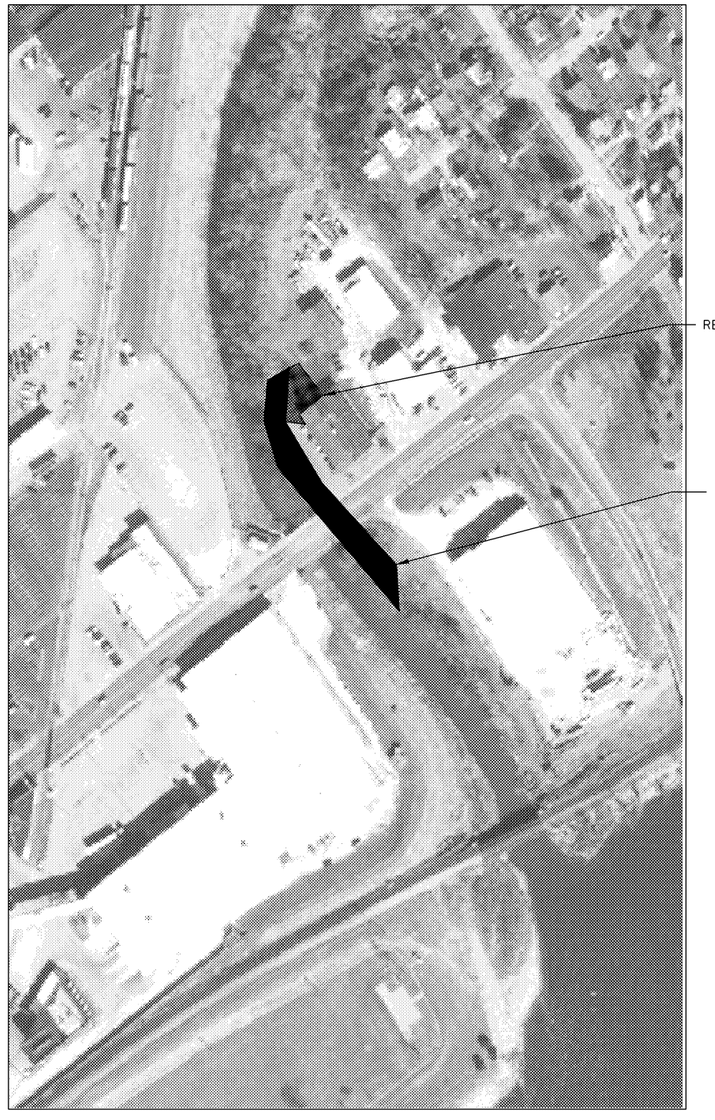

NOTES:

CHANNEL IMPROVEMENT WILL TAKE THE APARTMENT BUILDING'S PARKING LOT SPACES THAT FRONT THE MAD CREEK CHANNEL. PROJECT WILL PROVIDE REPLACEMENT PARKING SPACES TO THE IMMEDIATE WEST OF THE APARTMENT BUILDING.

US Army Corps of Engineers
Rock Island District

Symbol	Description	Date	Approved
	Revisions		

Designed By:	RET
Drawn By:	DWP
Checked By:	XYZ
Reviewed By:	RAL
Date:	XX XXX 01
Scale:	AS SHOWN
Project Code:	MU05
Solicitation Number:	DACW25-XX-B-XXXX

U.S. ARMY ENGINEER DISTRICT
CORPS OF ENGINEERS
ROCK ISLAND, ILLINOIS

MAD CREEK, IOWA
MUSCATINE, IOWA
LOCAL FLOOD PROTECTION

CHANNEL IMPROVEMENT

Sheet Reference Number:
C107
Sheet 11 of 19

27-JUN-2002 08:42
e:\projects\mu05\mu05c107.dgn
RTR 6-21-02

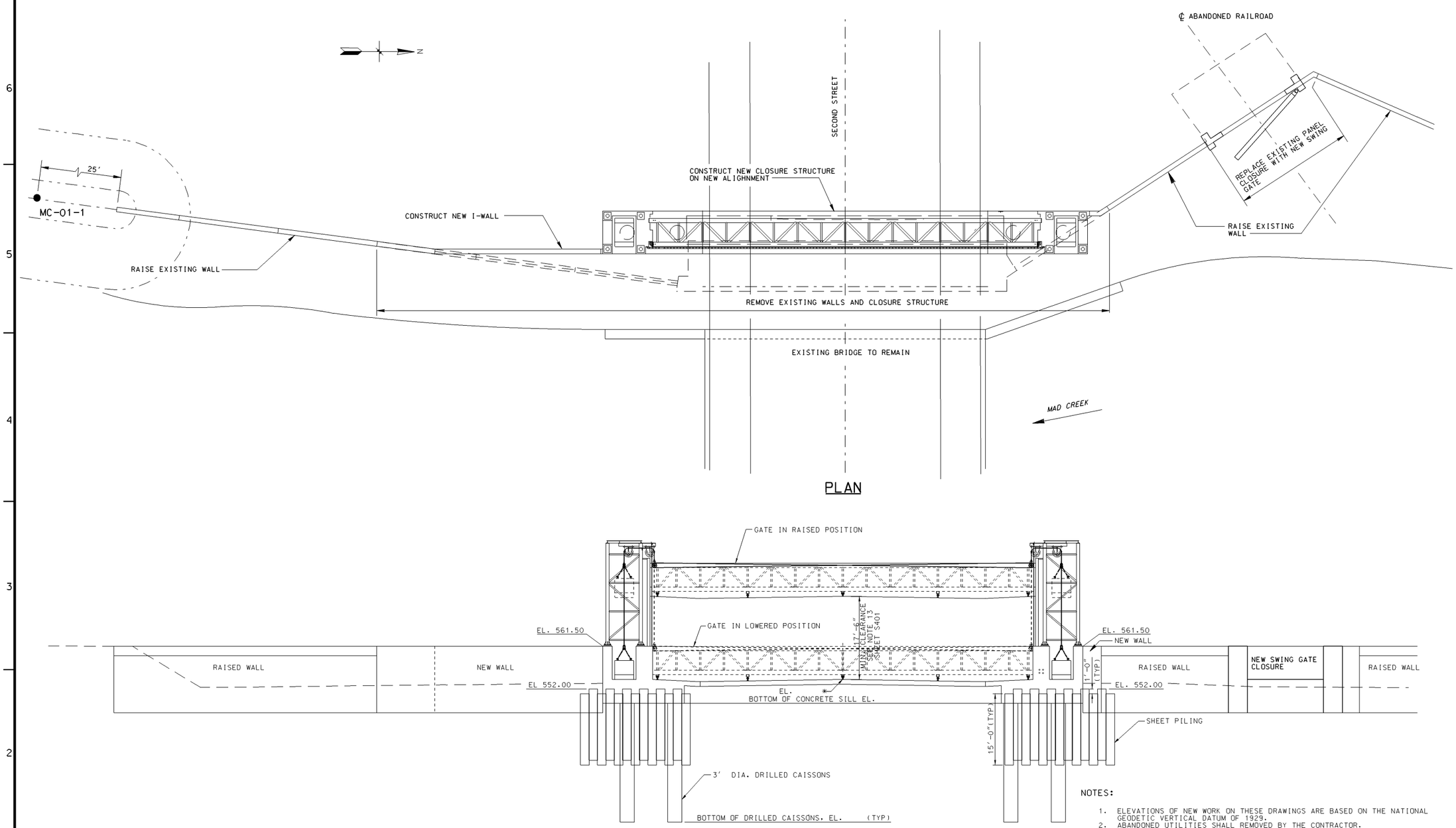

NOTES:

1. ELEVATIONS OF NEW WORK ON THESE DRAWINGS ARE BASED ON THE NATIONAL GEODETIC VERTICAL DATUM OF 1929.
2. ABANDONED UTILITIES SHALL REMOVED BY THE CONTRACTOR.
3. SHEET PILING UNDER CLOSURE GATE TOWER SHALL BE SZ-22, 15 FEET LONG STAGGERED IN ELEVATION AS SHOWN. FOR CONTINUATION UNDER I-WALL SEE DRAWINGS FOR I-WALL.

REFERENCES:

1. FOR DETAILS OF I-WALL RAISE, SEE SHEET C106.
2. FOR DETAILS OF NEW I-WALL, SEE SHEET C401.

10 0 10 20'
SCALE IN FEET

US Army Corps of Engineers
Rock Island District

Symbol	Description	Date	Approved
	Revisions		

Designed By:	Date: XX XXX 01
Drawn By:	Scale: AS SHOWN
Checked By:	Project Code: MU05
Reviewed By:	Solicitation Number: DACW25-XX-B-XXXX

U.S. ARMY ENGINEER DISTRICT
CORPS OF ENGINEERS
ROCK ISLAND, ILLINOIS

MAD CREEK, IOWA
MUSCATINE, IOWA
LOCAL FLOOD PROTECTION

SECOND ST. VERTICAL GATE CLOSURE PLAN AND PROFILE

Sheet Reference Number:
S101
Sheet 12 of 19

27-JUN-2002 08:40
e:\projects\mu05\mu05s101.dgn
RTR 6-21-02

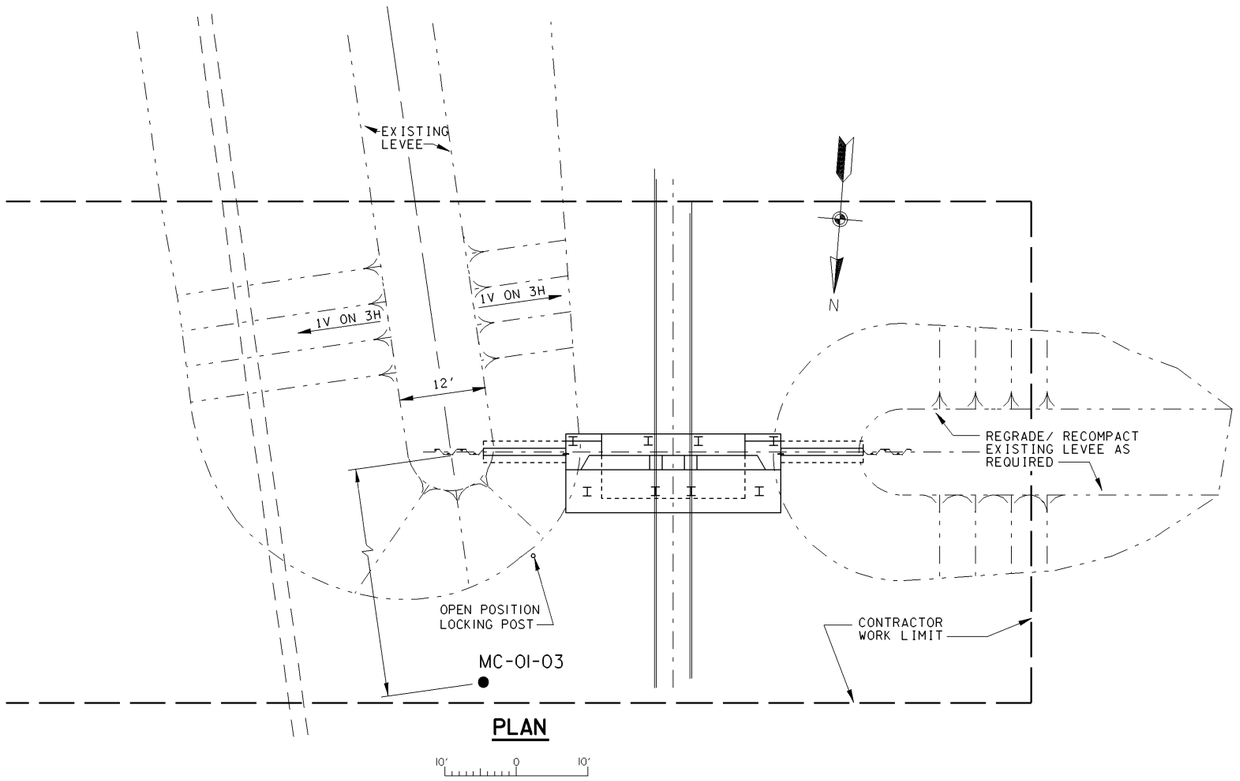

PLAN

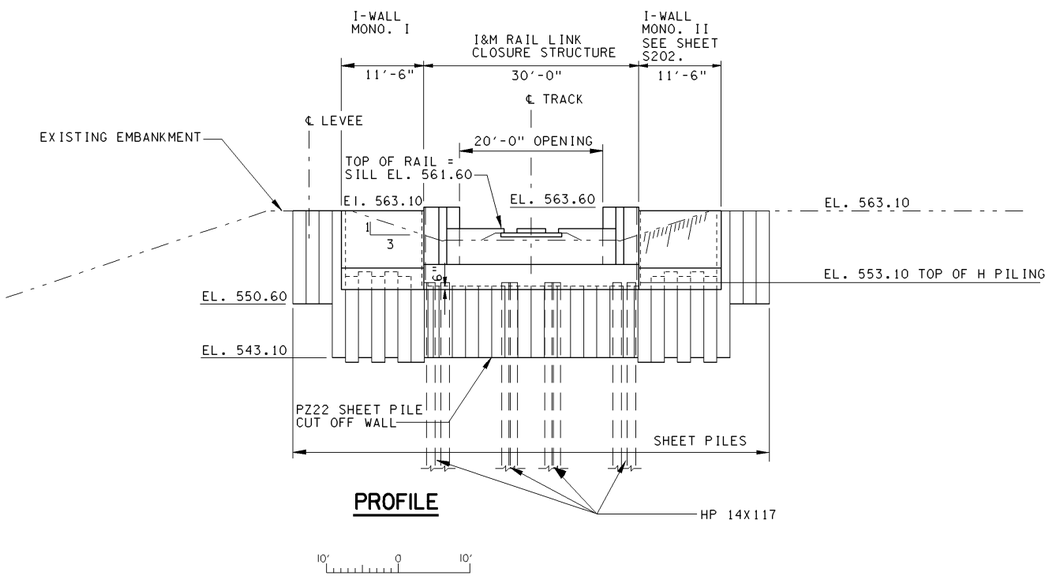

PROFILE

NOTES:

1. THE INTENT IS TO BUILD THE CLOSURE STRUCTURE AT THE EXISTING TRACK LOCATION. VERIFY THE EXISTING STATION BEFORE LAYING OUT THE STRUCTURE.
2. ELEVATIONS OF NEW WORK ON THESE DRAWINGS ARE BASED ON THE NATIONAL GEODETIC VERTICAL DATUM OF 1929.

REFERENCES:

1. FOR LOCATION OF STRUCTURE, SEE SHEET C105.
2. FOR BORING LOGS, SEE SHEET C101.

US Army Corps of Engineers
Rock Island District

Revisions

Symbol	Description	Date	Approved

Designed By:	RET
Drawn By:	RTR
Checked By:	XYZ
Reviewed By:	RAL
Date:	XX XXX 01
Scales:	AS SHOWN
Project Code:	MU05
Solicitation Number:	DACW25-XX-B-XXXX

U.S. ARMY ENGINEER DISTRICT
CORPS OF ENGINEERS
ROCK ISLAND, ILLINOIS

MAD CREEK, IOWA
MUSCATINE, 205
LOCAL FLOOD PROTECTION

I & M RAIL LINK RAILROAD CLOSURE PLAN AND PROFILE

Sheet Reference Number:
S201
Sheet 13 of 19

27-JUN-2002 08:39
e:\projects\mu05\mu05s201.dgn

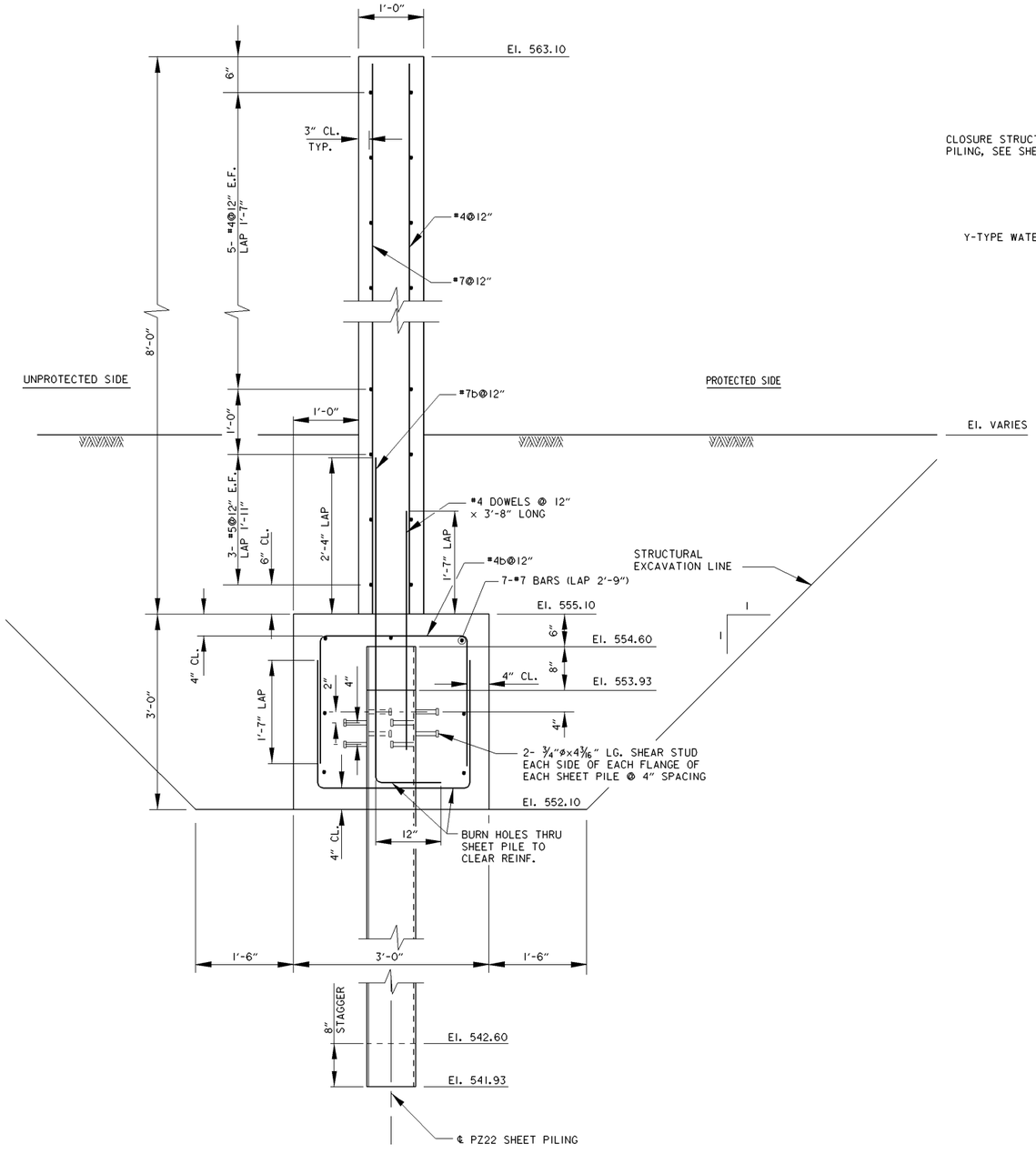

I-WALL CROSS SECTION

2 / S202

12" 0 1' 2'

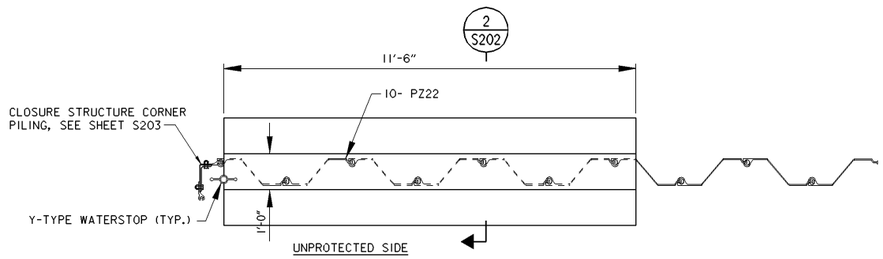

I-WALL MONOLITH II

NOTE: MONOLITH I IS SIMILAR EXCEPT OPPPOSITE HAND

1 / S202

5' 4' 3' 2' 1' 0 12"

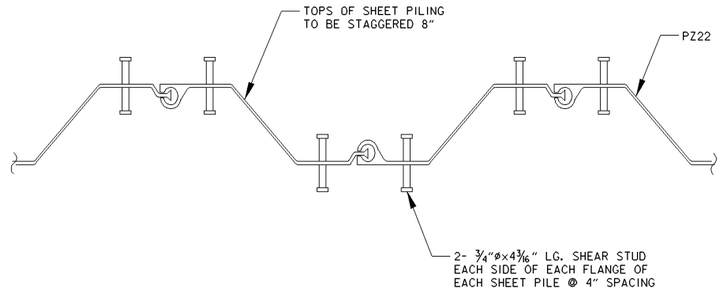

TYPICAL SHEAR STUD PLACEMENT

3 / S202

12" 0 1'

NOTES

1. ALL SHEET PILING IS PZ22.
2. ½" PREFORMED EXPANSION JOINT FILLER WILL BE PLACED BETWEEN ALL MONOLITHS.

REFERENCES

1. FOR LOCATION OF I-WALL MONOLITHS SEE SHEETS S201.

US Army Corps of Engineers Rock Island District

Symbol	Description	Date	Approved
	Revisions		

Designed By: RET	Drawn By: RTR	Checked By: XYZ	Reviewed By: RAL
Date: XX XXX 01	Scale: AS SHOWN	Project Code: MU05	Solicitation Number: DACW25-XX-B-XXXX

U.S. ARMY ENGINEER DISTRICT CORPS OF ENGINEERS ROCK ISLAND, ILLINOIS

MAD CREEK MUSCATINE, IOWA LOCAL FLOOD PROTECTION SECTION 205

I & M RAIL LINK RAILROAD CLOSURE I- WALL DETAILS

Sheet Reference Number: **S202**
Sheet 14 of 19

27-JUN-2002 08:38
e:\projects\mu05\mu05s202.dgn
RTR 6-21-02

NOTES:

THIS RAILROAD CLOSURE GATE IS TO BE CONSTRUCTED OF RECTANGULAR STRUCTURAL TUBING (A500, GRADE B). THIS DESIGN WAS CHOSEN DUE TO ITS SIMPLICITY, RATHER THAN OUT OF NECESSITY TO RESIST THE APPLIED HYDRAULIC LOAD. THE 4" DIAMETER HEX BOLT IS EXPECTED TO BE USED FOR RAISING AND LOWERING THE GATE. HOWEVER, IF THE GATE TENDS TO RACK DURING OPERATION, A FLOOR JACK CAN BE USED TO AID IN THE OPERATION. THE 4¾" DIAMETER INTERIOR BAR AND THE EMBEDDED FLOOR RECEPTACLE SHOULD BE MADE OUT OF A CORROSION RESISTANT METAL SUCH AS STAINLESS STEEL.

A GATE IS REQUIRED IN THIS LOCATION, RATHER THAN USING SAND, DUE TO THE RAPID FLUCTUATIONS IN THE CREEK LEVELS. FLASH FLOODING ON THIS CREEK DOES NOT ALLOW SUFFICIENT TIME FOR THE MOBILIZATION OF HEAVY EQUIPMENT TO FILL THE OPENING WITH SOIL. THE HEIGHT OF PROTECTION AT THIS CLOSURE IS APPROXIMATELY 2'. THE WIDTH OF THE CLOSURE IS APPROXIMATELY 20'.

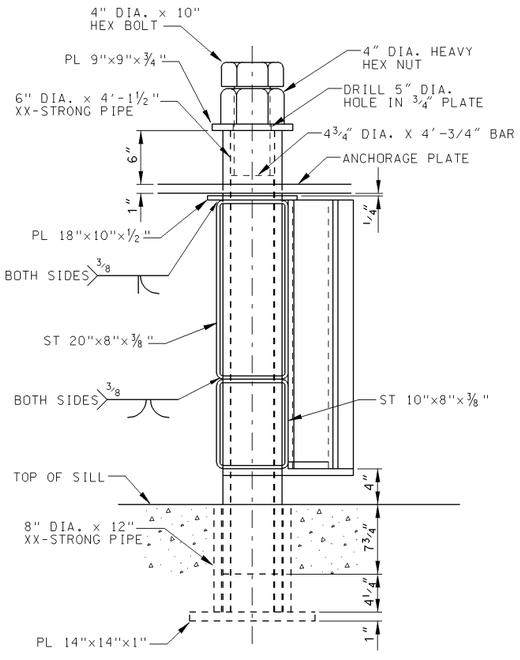

SECTION (A)

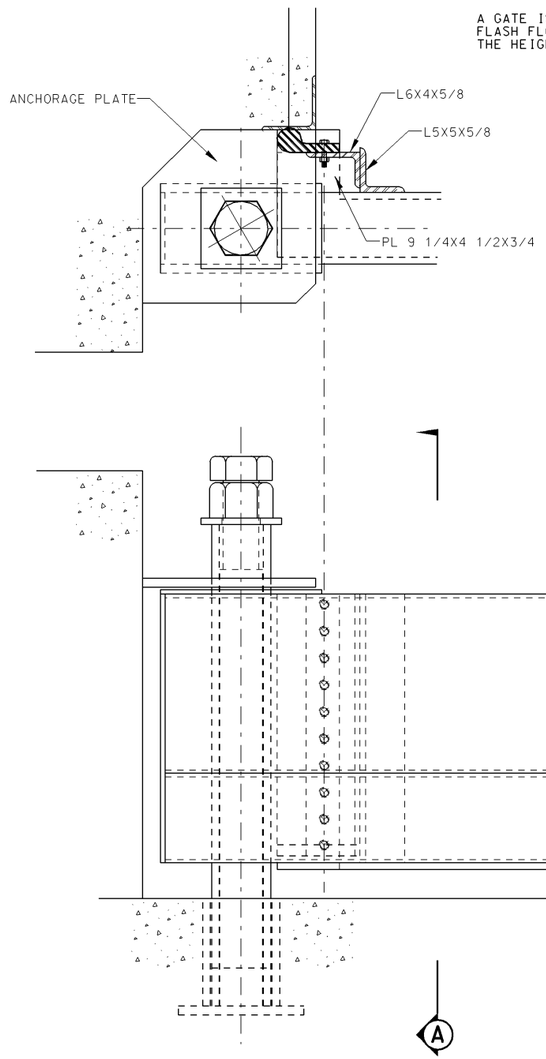

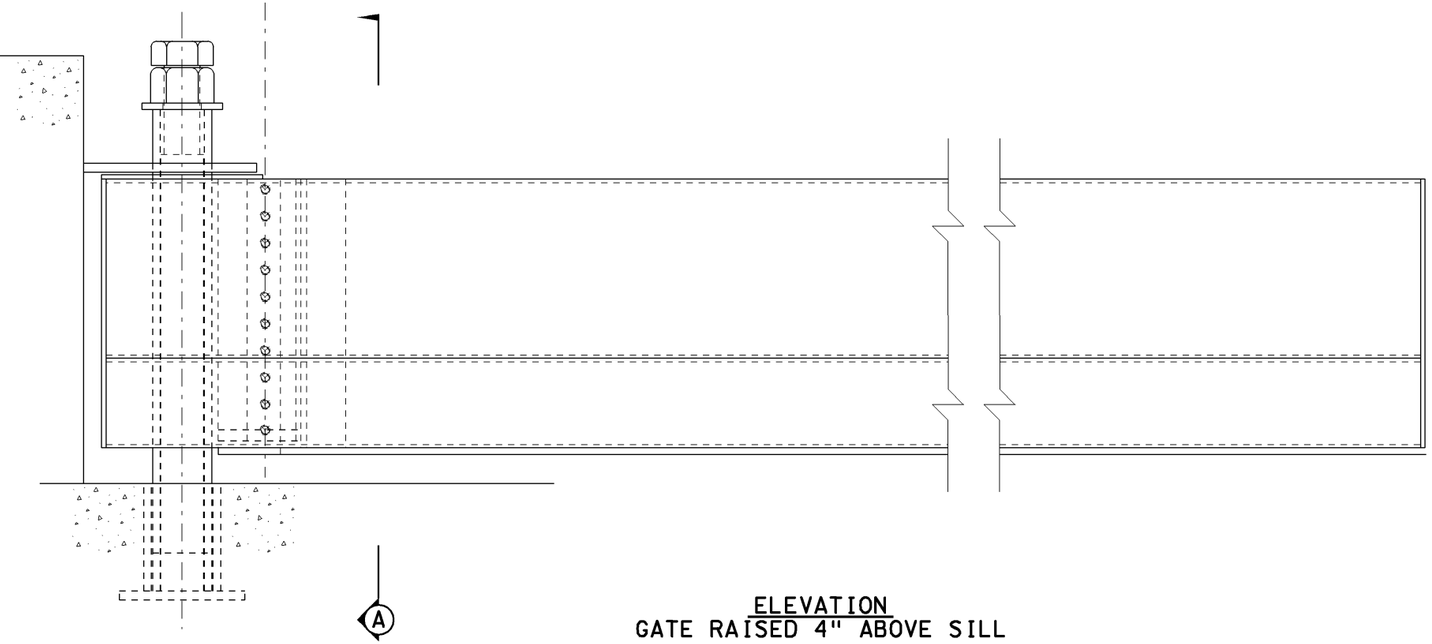

ELEVATION
GATE RAISED 4" ABOVE SILL

SCALE IN FEET

US Army Corps of Engineers
Rock Island District

Symbol	Description	Date	Approved
	Revisions		

Designed By: CDD	Date: XX XXX 01	U.S. ARMY ENGINEER DISTRICT CORPS OF ENGINEERS ROCK ISLAND, ILLINOIS	
Drawn By: GLW	Scale: AS SHOWN		
Checked By: ?	Project Code: MU05		
Reviewed By: ?	Solicitation Number: DACW25-XX-B-XXXX		

MAD CREEK, IOWA
MUSCATINE, SECTION 205
LOCAL FLOOD PROTECTION

I & M RAIL LINK
RAILROAD CLOSURE
GATE DETAILS

Sheet Reference Number:
S203
Sheet 15 of 19

27-JUN-2002 08:37
e:\projects\mu05\mu05s203.dgn
RTR 6-21-02

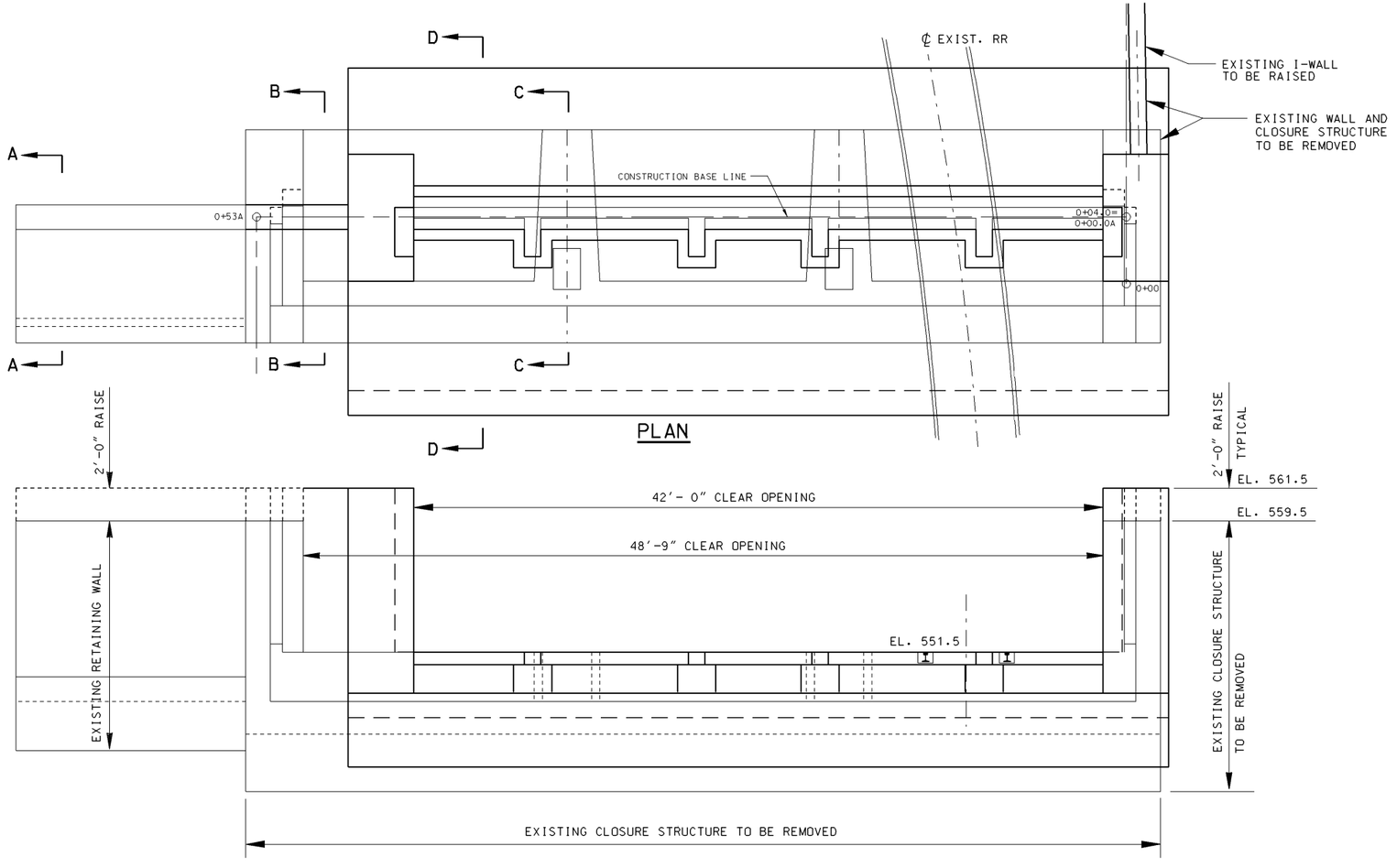

REFERENCES:

1. FOR LOCATION OF THIS STRUCTURE, SEE SHEET C102.
2. FOR DETAILS OF STRUCTURAL STEEL PANELS AND SUPPORTS ETC., SEE SHEETS S301 AND S302.
3. FOR EXISTING I-WALL TO BE RAISED, SEE SHEET S401.

NOTES:

1. THE CONTRACTOR SHALL VERIFY EXISTING DIMENSIONS BEFORE FABRICATING ANY NEW COMPONENTS REQUIRED TO MODIFY THIS STRUCTURE.
2. ELEVATIONS OF NEW WORK SHOWN ON THESE DRAWINGS ARE BASED ON THE NATIONAL GEODETIC VERTICLAL DATUM OF 1929.

4 0 4 8'
SCALE IN FEET

US Army Corps of Engineers
Rock Island District

Symbol	Description	Date	Approved
	Revisions		

Designed By: RET	Date: XX XXX 01	U.S. ARMY ENGINEER DISTRICT CORPS OF ENGINEERS ROCK ISLAND, ILLINOIS	
Drawn By: RTR	Scale: AS SHOWN		
Checked By: XYZ	Project Code: MU05		
Reviewed By: RAL	Solicitation Number: DACW25-XX-B-XXXX		

MAD CREEK
MISCELLANEOUS, IOWA
LOCAL FLOOD PROTECTION

MISSISSIPPI DRIVE CLOSURE MASONRY DETAILS

Sheet Reference Number:
S301
Sheet 16 of 19

27-JUN-2002 08:36
e:\projects\mu05\mu05s301.dgn

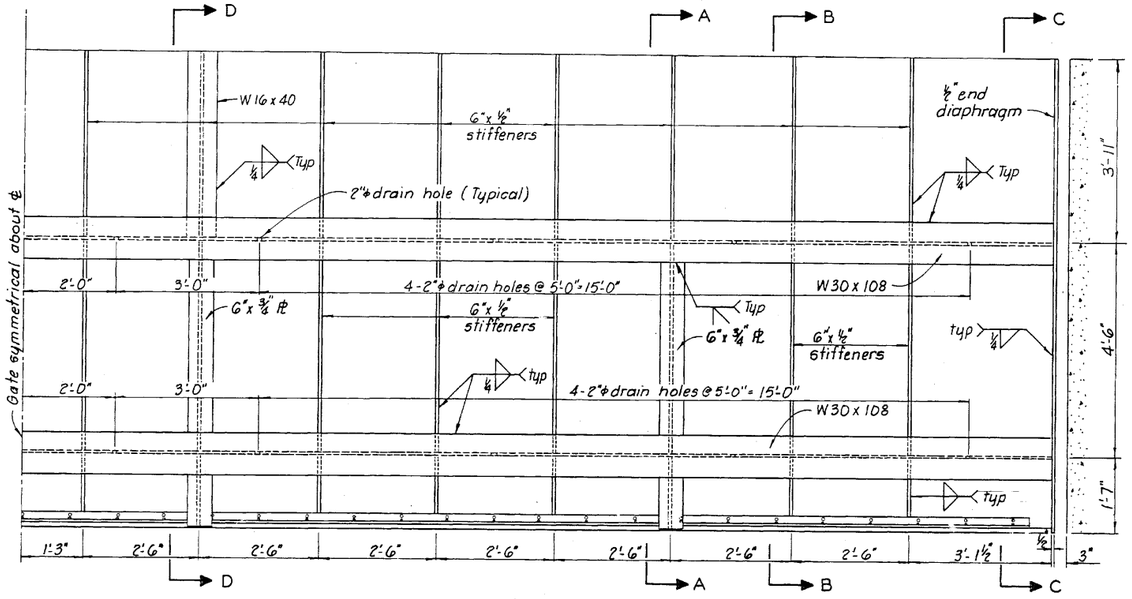

SECTIONAL ELEVATION

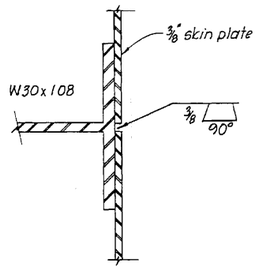

PERMISSIBLE SKIN PLATE SPLICE
Not to Scale

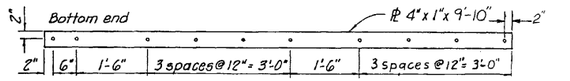

SIDE KEEPER PLATE
2 REQ'D. SEE NOTE 5

Note: Drill holes for ½"ϕ machine bolts with countersunk head, 4" long

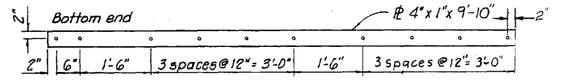

SIDE SPACING PLATE
2 REQ'D. SEE NOTE 5

Note: Drill holes for ½"ϕ machine bolts with countersunk head, 4" long

BOTTOM KEEPER PLATE
1 REQ'D. SEE NOTE 5

Note: Drill holes for ½"ϕ machine bolts with countersunk head, 3" long.

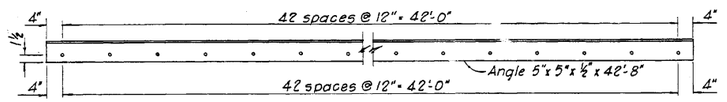

BOTTOM ANGLE BAR
1 REQ'D.

Note: Drill holes for ½"ϕ machine bolts with countersunk head. 1½" long in vertical leg or angle and drill holes for ½"ϕ machine bolts with countersunk head, 3" long in horizontal leg of angle.

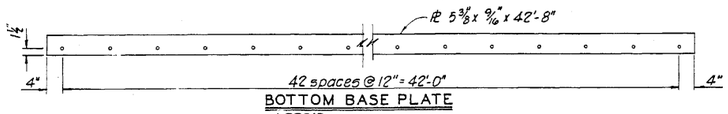

BOTTOM BASE PLATE
1 REQ'D.

Note: Drill holes for ½"ϕ machine bolts with countersunk head, 3" long.

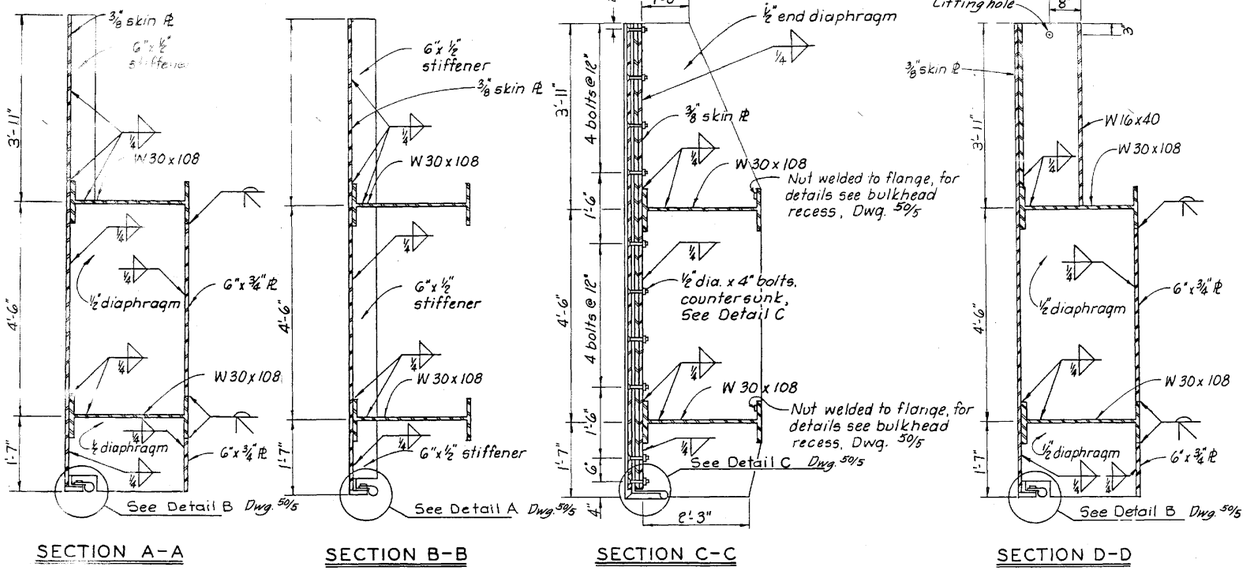

SECTION A-A SECTION B-B SECTION C-C SECTION D-D

NOTES:

1. SPLICES IN SKIN PLATE SHALL BE ACCOMPLISHED BY FULL PENETRATION WELDS.
2. ALL SKIN PLATE SPLICE LOCATIONS WILL BE SHOWN ON SHOP DRAWINGS.
3. ALL WELDING WILL BE IN ACCORDANCE WITH A.W.S. "STRUCTURAL WELDING CODE".
4. ALL STRUCTURAL STEEL TO BE ASTM-A36, ALL BOLTS TO BE ASTM-A307 UNLESS OTHERWISE NOTED.
5. EDGES BEARING AGAINST "J" SEAL TO BE FILLETED 1/8" MINIMAL FOR SECTION DETAILS SEE DWG. 50/5

US Army Corps of Engineers
Rock Island District

Symbol	Description	Date	Approved
	Revisions		

Designed By: RET	Date: XX XXX 01		
Drawn By: RTR	Scale: AS SHOWN		
Checked By: XYZ	Project Code: MU05		
Reviewed By: RAL	Solicitation Number: DACW25-XX-B-XXXX		

U.S. ARMY ENGINEER DISTRICT
CORPS OF ENGINEERS
ROCK ISLAND, ILLINOIS

MAD CREEK
MUSCATINE, IOWA
LOCAL FLOOD PROTECTION

MISSISSIPPI DRIVE CLOSURE BULKHEAD DETAILS

Sheet Reference Number:
5302
Sheet 17 of 19

27-JUN-2002 08:36
e:\projects\mu05\mu05302.dgn
RTR 6-21-02

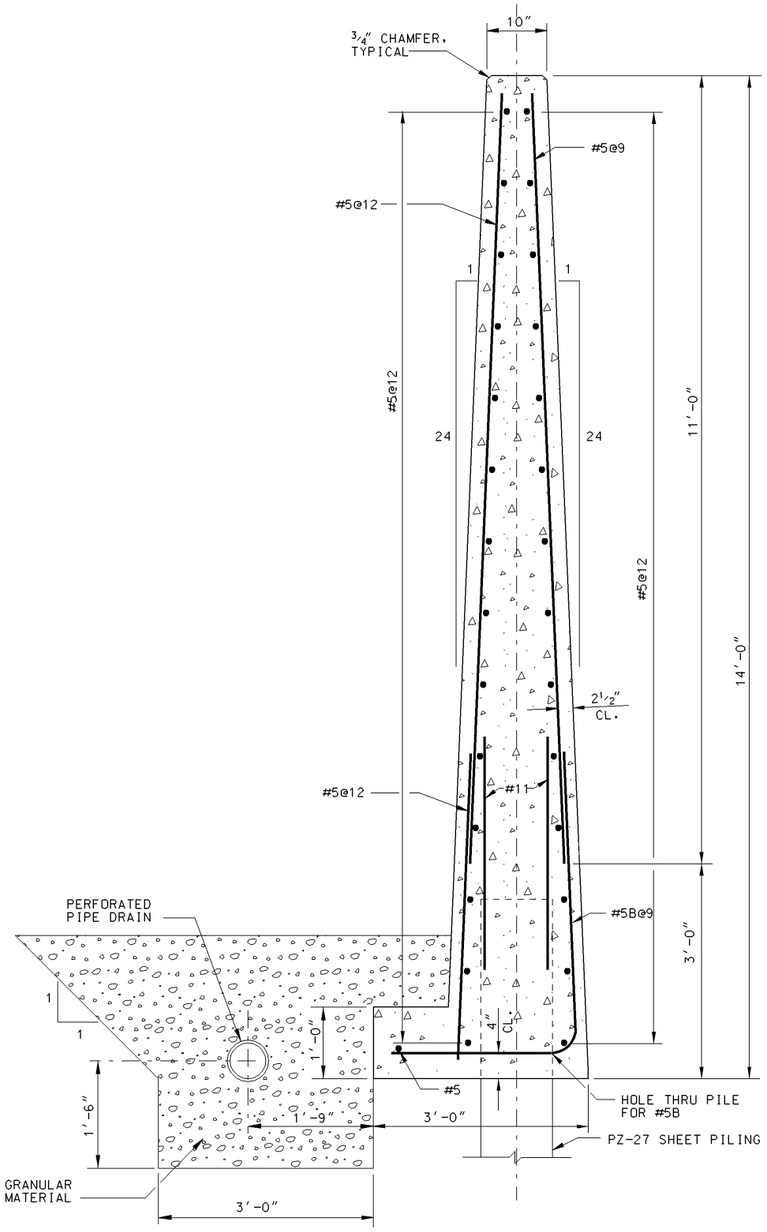

TYPICAL SECTION NEW I-WALL

STA. 15+42 TO STA. 15+90
STA. 15+78 TO STA. 17+55

1 0 1 2
SCALE IN FEET

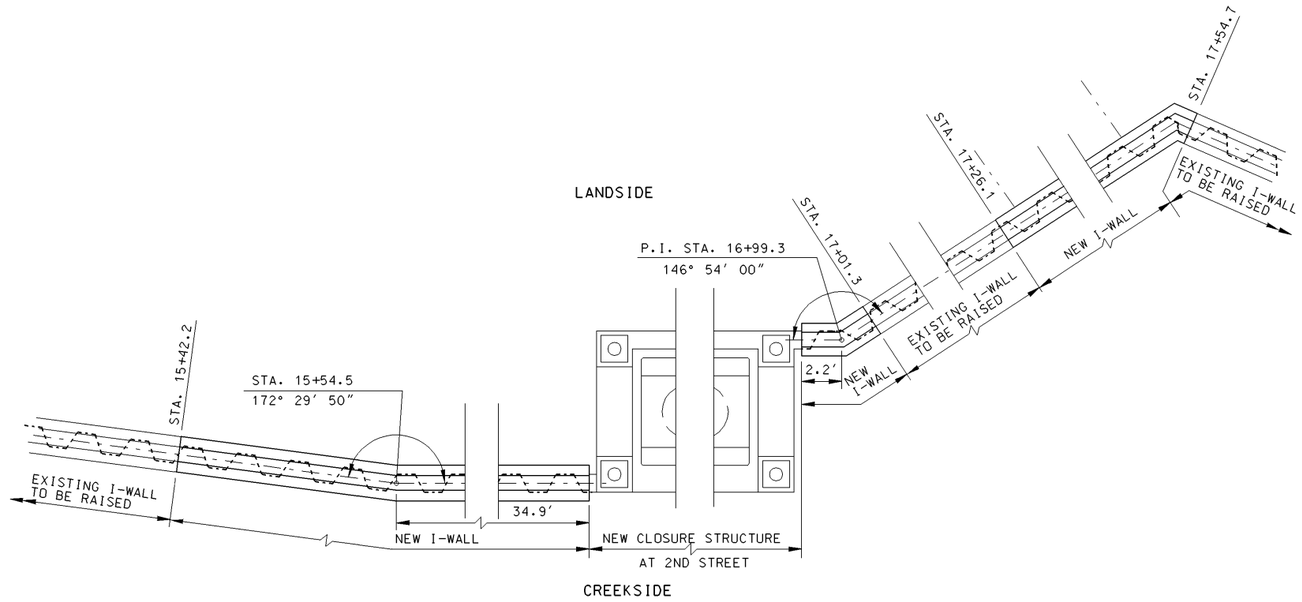

PLAN

NOTES:

1. ELEVATIONS OF NEW WORK ON THESE DRAWINGS ARE BASED ON THE NATIONAL GEODETIC VERTICAL DATUM OF 1988. ELEVATIONS SHOWN ON EXISTING ITEMS CONSTRUCTED IN THE EARLIER PROJECTS ARE BASED ON THE MEAN SEA LEVEL DATUM OF 1912.
2. STATIONING SHOWN IS ALONG THE CENTERLINE OF THE PREVIOUS PROJECT.

REFERENCES:

1. FOR LOCATION OF WALL RAISE, SEE SHEETS C102 - C105.
2. FOR DETAILS OF ADJACENT I-WALL RAISE, SEE SHEETS S401.

US Army Corps of Engineers
Rock Island District

Symbol	Description	Date	Approved
	Revisions		

Designed By: RET		Date: XX XXX 01	
Drawn By: RTR		Scale: AS SHOWN	
Checked By: XYZ		Project Code: MU05	
Reviewed By: RAL		Solicitation Number: DACW25-XX-B-XXXX	

U.S. ARMY ENGINEER DISTRICT
CORPS OF ENGINEERS
ROCK ISLAND, ILLINOIS

MAD CREEK
MUSCATINE, IOWA
LOCAL FLOOD PROTECTION

MISCELLANEOUS STRUCTURES
NEW I-WALL DETAILS

Sheet Reference Number:
S401
Sheet 18 of 19

27-JUN-2002 08:34
e:\projects\mu05\mu05s401.dgn
RTR 6-21-02

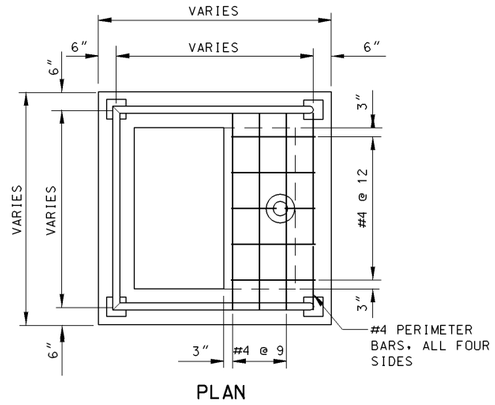

PLAN

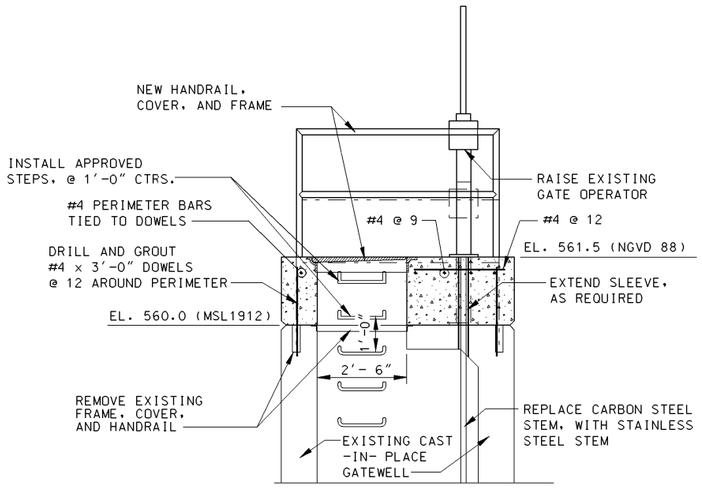

SECTION

TYPICAL GATEWELL DETAILS

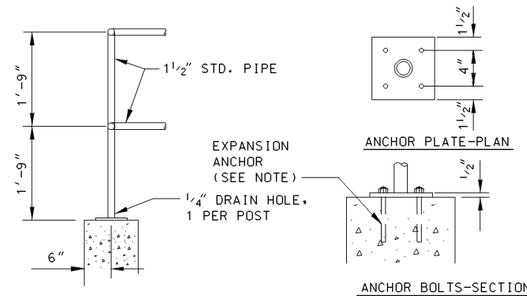

HANDRAIL NOTES:
1. EXPANSION ANCHOR BOLTS SHALL BE ½" DIA., HAVE AT LEAST 5" EMBEDMENT, 4000 LB. ULTIMATE PULLOUT AND 6000 LB. ULTIMATE SHEAR. ALL ANCHOR BOLTS AND FASTENERS ARE TO BE GALVANIZED.
2. WELD ALL PIPE JOINTS WTIH CONTINUOUS BEAD, SIZE EQUAL TO PIPE WALL THICKNESS, AND DRESS SMOOTH.
3. HANDRAIL WILL BE GALVANIZED AFTER FABRICATION.

HANDRAIL DETAILS

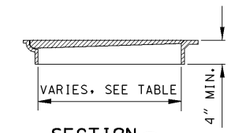

SECTION (A)

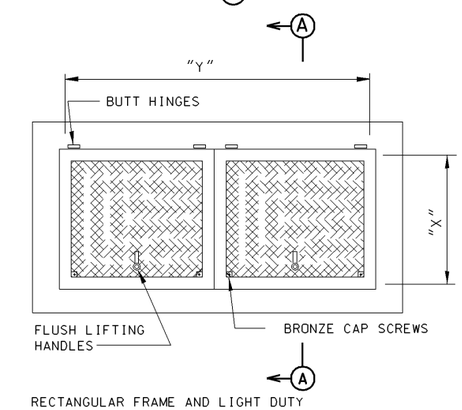

RECTANGULAR FRAME AND LIGHT DUTY BOLT-DOWN COVERS WITH FLUSH TYPE LIFTING HANDLES AND BUTT HINGES.

FRAME AND COVER DETAILS

(NOT TO SCALE)

EXISTING GATEWELL DATA					
IDENT.	STATION	OVERALL SIZE	OPENING SIZE	COVER TYPE	REMARKS
NO. 1	13+40	6'-0" X 7'-0"	2'-6" X 4'-8"	SINGLE	TWO LIFTS
NO. 2	24+50	6'-0" X 8'-0"	2'-6" X 6'-0"	DOUBLE	ONE LIFT
NO. 3	29+98	4'-6"X 6'-0"	2'-6" X 4'-0"	SINGLE	INTEGRAL W/WALL

US Army Corps of Engineers
Rock Island District

Symbol	Description	Date	Approved
	Revisions		

Designed By: RET	Date: XX XXX 01	U.S. ARMY ENGINEER DISTRICT CORPS OF ENGINEERS ROCK ISLAND, ILLINOIS	
Drawn By: RTR	Scale: AS SHOWN		
Checked By: XYZ	Project Code: MU05		
Reviewed By: RAL	Solicitation Number: DACW25-XX-B-XXXX		

MAD CREEK
MUSCATINE, IOWA
LOCAL FLOOD PROTECTION

MISCELLANEOUS STRUCTURES
GATEWELL EXTENSION DETAILS

Sheet Reference Number:
S501
Sheet 19 of 19

27-JUN-2002 08:33
e:\projects\mu05\mu05s501.dgn
RTR 6-21-02