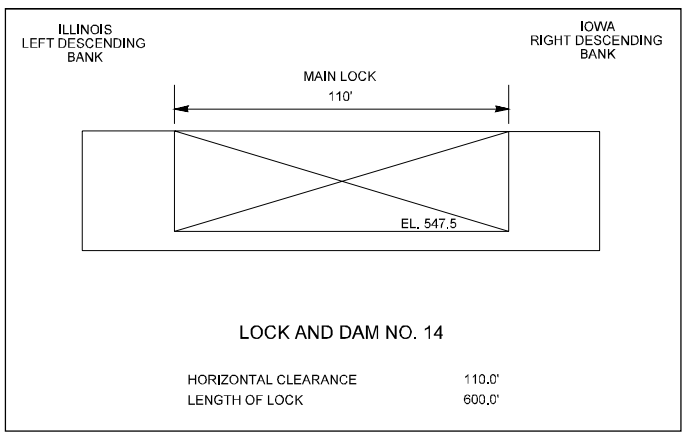

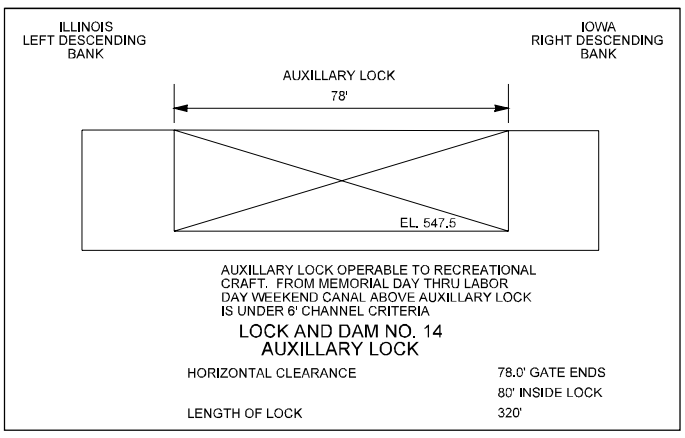

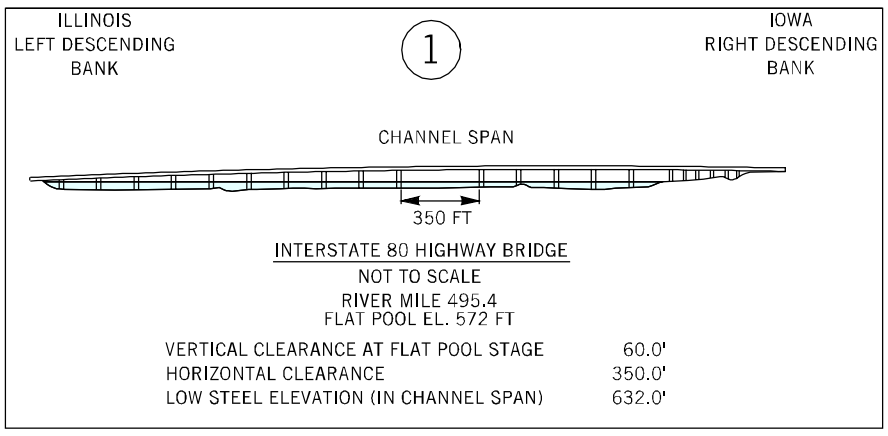

UTILITY CROSSING			
MILES	DESCRIPTION	VERTICAL CLEARANCE ft. above flat pool-or- (ELEV., FT. NGVD)	OWNER
489.7	AERIAL CROSSING	47.0'	MID AMERICA ENERGY CO.
490.0	PIPELINE	NOT APPLICABLE	MID AMERICA ENERGY CO.
490.5	AERIAL CROSSING	93.0'	MID AMERICA ENERGY CO.