ILLINOIS WATERWAY
RIVER MILES 124-128

LAKE CHAUTAUQUA REHABILITATION AND ENHANCEMENT

MASON COUNTY, ILLINOIS

U.S. ARMY CORPS OF ENGINEERS
UPPER MISSISSIPPI RIVER SYSTEM
ENVIRONMENTAL MANAGEMENT PROGRAM

OPERATION AND MAINTENANCE MANUAL

AS-BUILT DRAWINGS

APRIL 2005

US Army Corps
of Engineers
Rock Island District

ILLINOIS WATERWAY
ENVIRONMENTAL MANAGEMENT PROGRAM
LA GRANGE POOL, RIVER MILE 124 - 129.5

LAKE CHAUTAUQUA
AS-BUILTS

AS OF 4/10/01

US Army Corps of Engineers
Rock Island District

Symbol	Description	Date	Appr.
	Revisions		

THIS PROJECT WAS DESIGNED BY THE ROCK ISLAND DISTRICT OF THE U.S. ARMY CORPS OF ENGINEERS. THE INITIALS OR SIGNATURES AND REGISTRATION NUMBERS OF THE PERSONS RESPONSIBLE FOR THE PROJECT DOCUMENTS WITHIN THE SCOPE OF THEIR EMPLOYMENT AS REQUIRED BY ER 1110-1-8159 ARE ON FILE IN THE ROCK ISLAND DISTRICT OFFICE. RECOMMENDATION AND APPROVAL OF ALL DRAWINGS IN THIS SET AS INDICATED ON EACH INDIVIDUAL TITLE BLOCK.

Reviewed by: Chief, Hydraulics Branch — Date 7-31-97
Approved by: Chief, Geotechnical Branch — Date 7-31-97
Corr. Corps of Engineers — Date

U.S. ARMY ENGINEER DISTRICT
CORPS OF ENGINEERS
ROCK ISLAND, ILLINOIS

Designed By: DJH/WM/DRC/
Drawn By: MD/TAW
Checked By:
Revised By: JJC
Date: MAR 1999
Scale: AS SHOWN
Drawing Code: 1-L1-3-1/67
Solicitation Number: DACW25-97-B-0032

ILLINOIS WATERWAY
ENVIRONMENTAL MANAGEMENT PROGRAM
LA GRANGE POOL, MILE 124 TO 129.5
LAKE CHAUTAUQUA
OPERATIONS AND MAINTENANCE

COVER SHEET

Sheet Reference Number:
X10
Sheet 1 of 84

02-MAR-2005 08:14
Memorial Drive

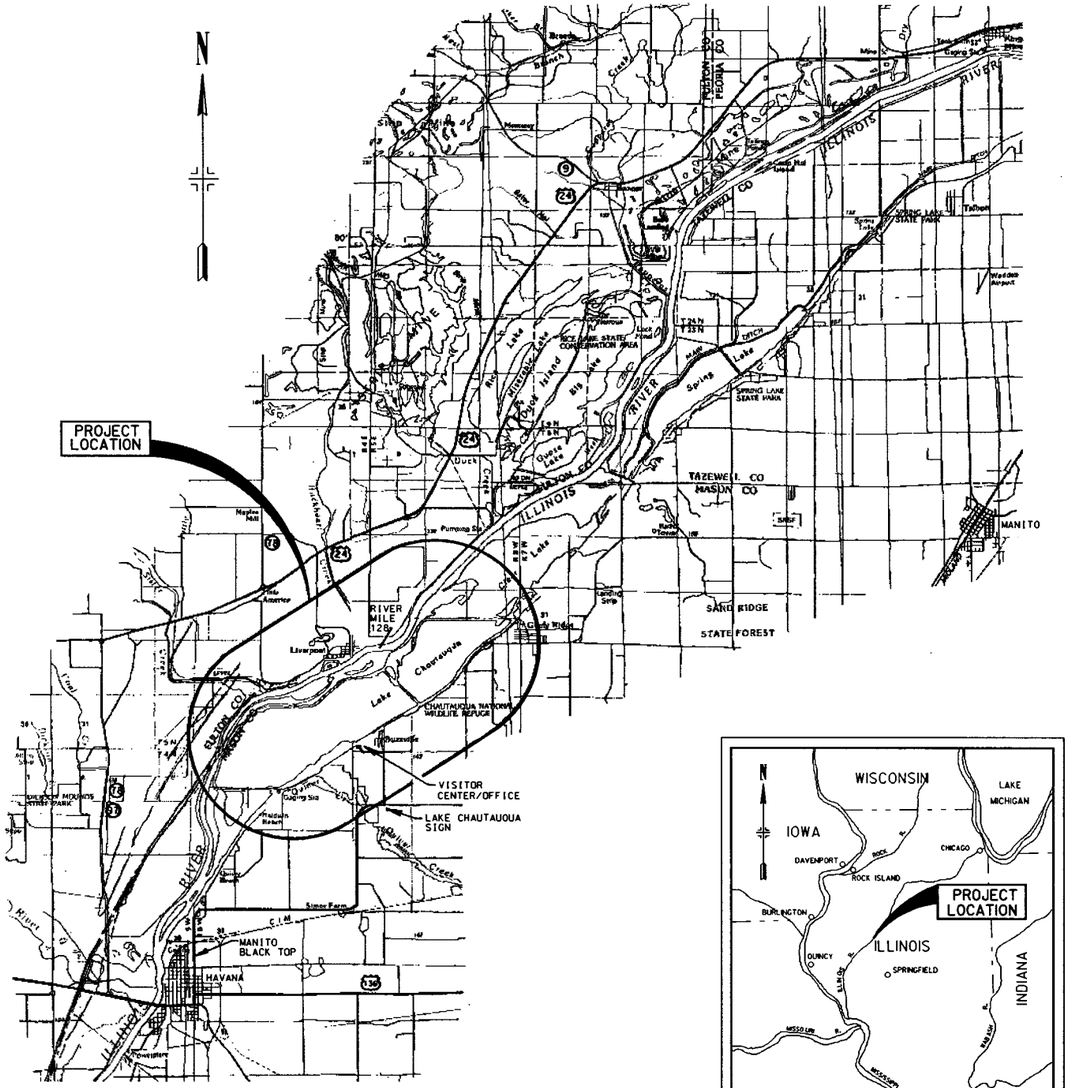

LOCATION PLAN

6000 3000 0 6000 12000
SCALE IN FEET

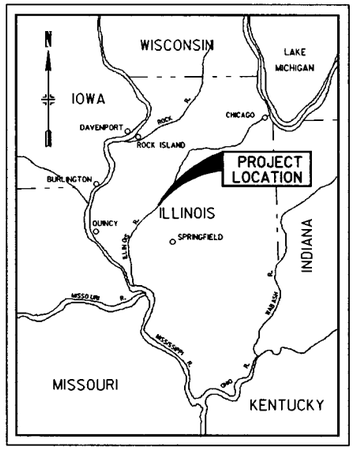

VICINITY MAP

25 0 25 50 75
SCALE IN MILES

INDEX

SHEET NO.	SHEET REF. NO.	TITLE OF DRAWING
1	X10	COVER SHEET
2	X20	LOCATION MAPS - AND INDEX
3	X30	SITE PLAN
4	B10	BORING LOGS I
5	B20	BORING LOGS II
6	B30	BORING LOGS III
7	C10	PERIMETER LEVEE PLAN - STA. 0+00 B TO - STA. 45+00 B
8	C20	PERIMETER LEVEE PLAN - STA. 45+00 B TO - STA. 90+00 B
9	C30	PERIMETER LEVEE PLAN - STA. 90+00 B TO - STA. 135+00 B
10	C40	PERIMETER LEVEE PLAN - STA. 135+00 B TO - STA. 154+10.6T B
11	C50	CROSS DIKE PLAN - STA. 0+00 A TO - STA. 25+00 A
12	C60	CROSS DIKE PLAN - STA. 25+00 A TO - STA. 49+49.28 A
13	C70	BOAT RAMP - PLAN AND DETAILS
14	C80	ACCESS ROAD PLAN STA 0+00F TO STA 12+19.77F
15	C90	CELLULAR STRUCTURE - SITE PLAN
16	C100	CELLULAR STRUCTURE LOCATION PLAN
17	C110	PUMP STATION - SITE PLAN
18	C120	TYPICAL CROSS SECTIONS
19	C130	LOWER LAKE DEWATERING CHANNEL PLAN & DETAILS STA 0+00 TO 35+00
20	C140	LOWER LAKE DEWATERING CHANNEL PLAN & DETAILS STA 156+00 TO 189+00
21	C150	LOWER LAKE DEWATERING CHANNEL TYPICAL PLANS AND SECTIONS
22	C160	LIVERPOOL DITCH EXCAVATION PLAN - UPPER STA 0+00C TO STA 25+00C
23	C170	LIVERPOOL CLOSURE STRUCTURE PLAN AND SECTIONS
24	C180	MEYER'S DITCH RIP RAP PLACEMENT LOCATIONS
25	C190	MEYER'S DITCH RIP RAP PLACEMENT TYPICAL CROSS SECTIONS
26	C200	LAKE CHAUTAUQUA MONITORING PLAN
2T	S10	LEFT SIDE - CELL STRUCTURE - LAYOUT
28	S20	RIGHT SIDE - CELL STRUCTURE - LAYOUT
29	S30	PLAN AND ELEVATION
30	S40	SLAB AND WALL REINFORCEMENT
31	S50	H-PILE LAYOUT AND PLATFORM REINFORCEMENT
32	S60	PLATFORM DETAILS
33	S70	STOPLOG DETAILS
34	S80	BRIDGE - GENERAL PLAN - AND NOTES
35	S90	BRIDGE - BEAM DETAILS
36	S100	BRIDGE - P.P.C. DECK BEAM - PILE BEAM ABUTMENT
37	S110	BRIDGE - P.P.C. DECK BEAM - SUPERSTRUCTURE
38	S120	BRIDGE - STEEL BRIDGE RAIL - TYPE SM
39	S130	PUMP STATION - AND DETAILS
40	S140	PUMP STATION - STOPLOG SLOT - DETAILS
41	S150	PUMP STATION STRUCTURAL SITE PLAN
42	S160	PUMP STATION ARCHITECTURAL DETAILS I
43	S170	PUMP STATION ARCHITECTURAL DETAILS II
44	S180	PUMP STATION REINFORCING I
45	S190	PUMP STATION REINFORCING II
46	S200	PUMP STATION BOX CULVERT AND HEADWALL
4T	S210	PUMP STATION TRASHRACK
48	S220	PUMP STATION GATE PEDESTALS ANCHOR ROD REPAIR
49	S230	ELEVATED CONTROL PLATFORM
50	S240	STOPLOG STRUCTURE PLAN AND SECTION
51	S250	STOPLOG STRUCTURE PILE LAYOUT
52	S260	STOPLOG STRUCTURE TRASHRACK
53	S270	STOPLOG STRUCTURE STOPLOG DETAILS
54	S280	STOPLOG STRUCTURE AND REINFORCING DETAILS
55	S290	GUARD RAIL AND MISCELLANEOUS DETAILS
56	S300	MISCELLANEOUS REPAIRS
57	E10	LINE DIAGRAM AND LEGEND
58	E20	PUMP STATION CONTROL PANEL
59	E30	PUMP CONTROLLER ELEMENTARY DIAGRAM
60	E40	PANEL LAYOUT DRAWINGS
61	E50	PUMP CONTROLLER WIRING DAIGRAM
62	E60	BILL OF MATERIAL
63	F180	LOWER LAKE LEVEE PROFILE STA. 0+00 F TO STA. 54+00 F
64	F190	LOWER LAKE LEVEE PROFILE STA. 56+00 F TO STA. 110+00 F
65	F200	LOWER LAKE LEVEE PROFILE STA. 112+00 F TO STA. 166+00 F
66	F210	LOWER LAKE LEVEE PROFILE STA. 168+00 F TO STA. 222+00 F
67	F220	LOWER LAKE LEVEE PROFILE STA. 224+00 F TO STA. 278+00 F
68	F230	LOWER LAKE LEVEE PROFILE STA. 280+00 F TO STA. 312+00 F
69	F240	LOWER LAKE CROSS SECTIONS I
70	F250	LOWER LAKE CROSS SECTIONS II
71	F260	SPILLWAY PLAN AND CROSS SECTIONS
72	F270	LOWER LAKE DEWATERING CHANNEL CROSS SECTIONS I
73	F280	LOWER LAKE DEWATERING CHANNEL CROSS SECTIONS II
74	F290	LOWER LAKE DEWATERING CHANNEL CROSS SECTIONS III
75	F300	LOWER LAKE DEWATERING CHANNEL CROSS SECTIONS IV
76	F310	LOWER LAKE DEWATERING CHANNEL CROSS SECTIONS V
77	F320	LOWER LAKE DEWATERING CHANNEL CROSS SECTIONS VI
78	F330	LOWER LAKE DEWATERING CHANNEL CROSS SECTIONS VII
79	F340	LOWER LAKE DEWATERING CHANNEL CROSS SECTIONS VIII
80	F350	LOWER LAKE DEWATERING CHANNEL CROSS SECTIONS IX
81	F360	LOWER LAKE DEWATERING CHANNEL CROSS SECTIONS X
82	F370	LOWER LAKE DEWATERING CHANNEL CROSS SECTIONS XI
83	F380	LOWER LAKE DEWATERING CHANNEL CROSS SECTIONS XII
84	F390	LOWER LAKE DEWATERING CHANNEL CROSS SECTIONS XIII

US Army Corps of Engineers
Rock Island District

Symbol	Description	Date	Approved
AS CONSTRUCTED		26AUG04	DRC/RAL

Revisions

Designed By: DRC
Date: MAR 1999
Drawn By: RLC-CAB
Scale: AS SHOWN
Checked By: ERK
Drawing Code: 1-L1-3-1/67
Reviewed By: JJC
Solicitation Number: DACW25-97-B-0032

U.S. ARMY ENGINEER DISTRICT
CORPS OF ENGINEERS
ROCK ISLAND, ILLINOIS

ILLINOIS WATERWAY
ENVIRONMENTAL MANAGEMENT PROGRAM
LA GRANGE POOL, MILE 124 TO 129.5
LAKE CHAUTAUQUA
OPERATIONS AND MAINTENANCE

LOCATION MAPS AND INDEX

Sheet Reference Number:
X20
Sheet 2 of 84

02-MAR-2005 08:16
wsmr/d18ROOSPRO1/projects/EP52/ROM Manual - Use this cellmap52X020.dgn

GENERAL NOTES

1. THE SCOPE OF WORK GENERALLY CONSISTS OF FOLLOWING:
   A. CONSTRUCT NEW STOPLOG WATER CONTROL STRUCTURE IN LOWER LAKE.
   B. CONSTRUCT ACCESS ROAD, BOAT RAMP, AND PARKING AREA.
   C. REPAIR AND RAISE CROSS DIKE.
   D. REPAIR AND RAISE UPPER LAKE PERIMETER LEVEE.
   E. CONSTRUCT NEW SHEET PILE CELLULAR WATER CONTROL STRUCTURE WITH THREE 10 FT X 10 FT SLUICE GATES.
   F. INSTALL 41,000 GPM ELECTRICAL PUMP STATION.
   G. EXCAVATE DRAINAGE CHANNELS IN LOWER LAKE.
   H. CHANNEL EXCAVATION TO PUMP STATION.
   I. CONSTRUCT A RIPRAP CLOSURE STRUCTURE.
   J. CONSTRUCT LOWER LAKE DRAINAGE CHANNEL AND SPOIL BERM FROM STATION 2+00E. TO STATION 188+00E.
   K. SHAPE AND PLACE APPROXIMATELY 400 TONS OF BEDDING AND 750 TONS OF RIPRAP
2. THE LAYOUT OF PROJECT FEATURES AS SHOWN SHALL BE FIELD STAKED BY CONTRACTOR AND APPROVED BY THE CONTRACTING OFFICER REPRESENTIVE (COR). COR MAY MAKE MINOR ALIGNMENT CHANGES.
3. CONSTRUCTION IS RESTRICTED BY HIGH AND/OR LOW WATER LEVELS. ACCESS SHALL BE ASCERTAINED BY THE BIDDER DURING ADVERTISEMENT.
4. THE CONTRACTOR SHOULD SCHEDULE ITS WORK TO COINCIDE WITH SUMMER AND EARLY FALL DRAW-DOWN PERIODS. THE DRAW-DOWN PERIOD IS FROM JUNE 1 TO OCTOBER 15. HOWEVER, HIGH RIVER LEVELS CAN PREVENT THE USFWS FROM DEWATERING THE LAKE. THE GOVERNMENT HAS NO RESPONSIBILITY TO OPERATE THE PUMP AT ITS EXPENSE. SEE SPECIFICATIONS.
5. NATURAL SPRINGS ADD WATER TO UPPER AND LOWER LAKES.
6. CONTOUR LINES ARE COMPUTER GENERATED. CONTRACTOR MAY FIND DEVIATIONS FROM ACTUAL CONDITIONS.

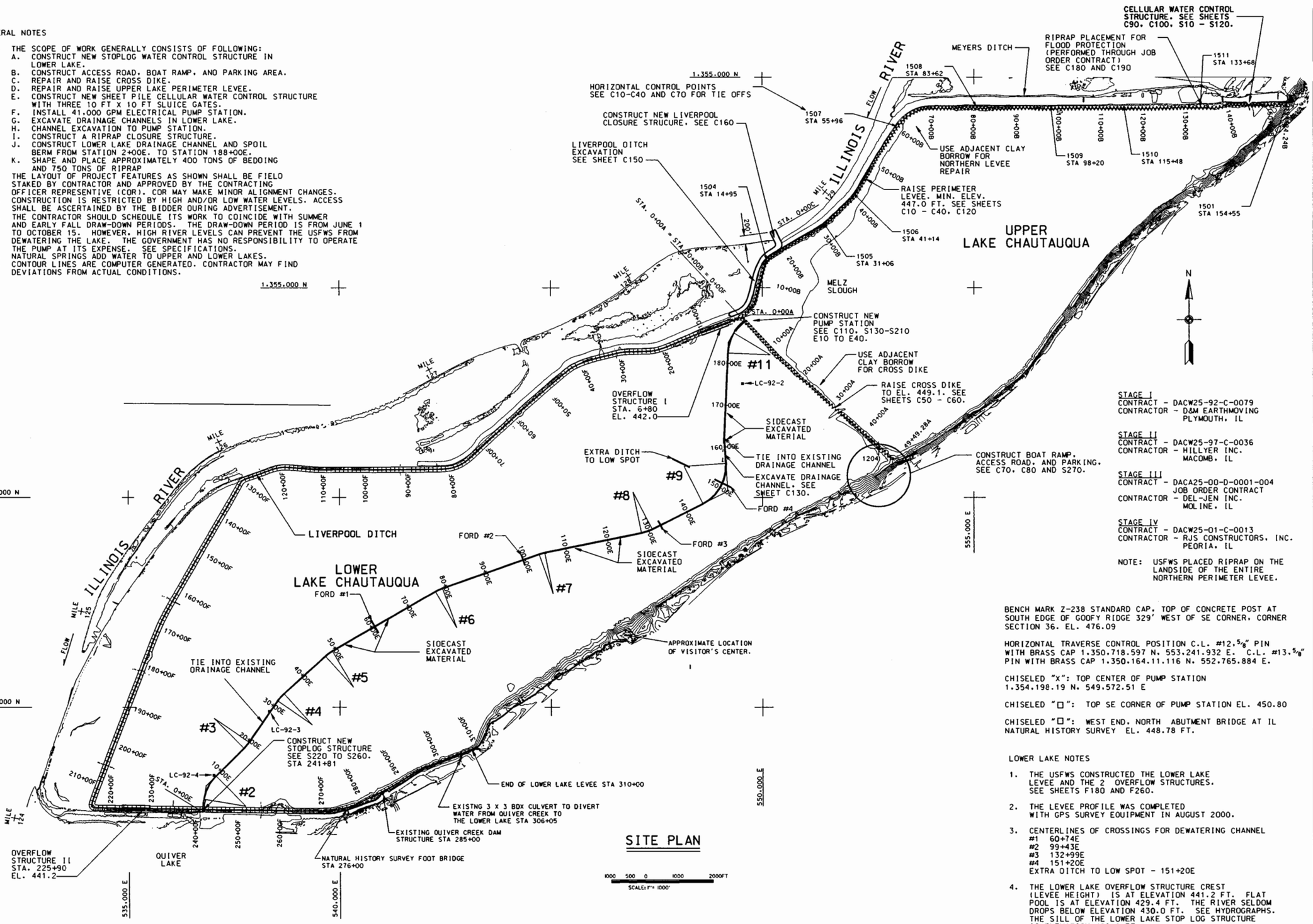

SITE PLAN

STAGE I
CONTRACT - DACW25-92-C-0079
CONTRACTOR - D&M EARTHMOVING
PLYMOUTH, IL

STAGE II
CONTRACT - DACW25-97-C-0036
CONTRACTOR - HILLYER INC.
MACOMB, IL

STAGE III
CONTRACT - DACA25-00-D-0001-004
JOB ORDER CONTRACT
CONTRACTOR - DEL-JEN INC.
MOLINE, IL

STAGE IV
CONTRACT - DACW25-01-C-0013
CONTRACTOR - RJS CONSTRUCTORS, INC.
PEORIA, IL

NOTE: USFWS PLACED RIPRAP ON THE LANDSIDE OF THE ENTIRE NORTHERN PERIMETER LEVEE.

BENCH MARK Z-238 STANDARD CAP, TOP OF CONCRETE POST AT SOUTH EDGE OF GOOFY RIDGE 329' WEST OF SE CORNER, CORNER SECTION 36, EL. 476.09

HORIZONTAL TRAVERSE CONTROL POSITION C.L. #12.5/8" PIN WITH BRASS CAP 1,350,718.597 N, 553,241.932 E. C.L. #13.5/8" PIN WITH BRASS CAP 1,350,164.11.116 N, 552,765.884 E.

CHISELED "X": TOP CENTER OF PUMP STATION
1,354,198.19 N, 549,572.51 E

CHISELED "□": TOP SE CORNER OF PUMP STATION EL. 450.80

CHISELED "□": WEST END, NORTH ABUTMENT BRIDGE AT IL NATURAL HISTORY SURVEY EL. 448.78 FT.

LOWER LAKE NOTES

1. THE USFWS CONSTRUCTED THE LOWER LAKE LEVEE AND THE 2 OVERFLOW STRUCTURES. SEE SHEETS F180 AND F260.
2. THE LEVEE PROFILE WAS COMPLETED WITH GPS SURVEY EQUIPMENT IN AUGUST 2000.
3. CENTERLINES OF CROSSINGS FOR DEWATERING CHANNEL
   #1 60+74E
   #2 99+43E
   #3 132+99E
   #4 151+20E
   EXTRA DITCH TO LOW SPOT - 151+20E
4. THE LOWER LAKE OVERFLOW STRUCTURE CREST (LEVEE HEIGHT) IS AT ELEVATION 441.2 FT. FLAT POOL IS AT ELEVATION 429.4 FT. THE RIVER SELDOM DROPS BELOW ELEVATION 430.0 FT. SEE HYDROGRAPHS. THE SILL OF THE LOWER LAKE STOP LOG STRUCTURE IS ELEVATION 429.0 FT.

US Army Corps of Engineers
Rock Island District

Symbol	Description	Date	Approved
	AS CONSTRUCTED	30 MAR 04	
1	AMD. #1 - MINOR REVISION	27 AUG 92	

Revisions

Designed By: DRC
Drawn By:
Checked By:
Reviewed By: JJC
Date: MAR 1999
Scale: AS SHOWN
Drawing Code: 1-L1-3-1/67
Solicitation Number: DACW25-97-B-0032

U.S. ARMY ENGINEER DISTRICT
CORPS OF ENGINEERS
ROCK ISLAND, ILLINOIS

ILLINOIS WATERWAY
ENVIRONMENTAL MANAGEMENT PROGRAM
LA GRANGE POOL, MILE 124 TO 129.5
LAKE CHAUTAUQUA
OPERATIONS AND MAINTENANCE

SITE PLAN

Sheet Reference Number:
X30
Sheet 3 of 84

02-MAR-2005 08:17
Use this ordmap52x030.dgn

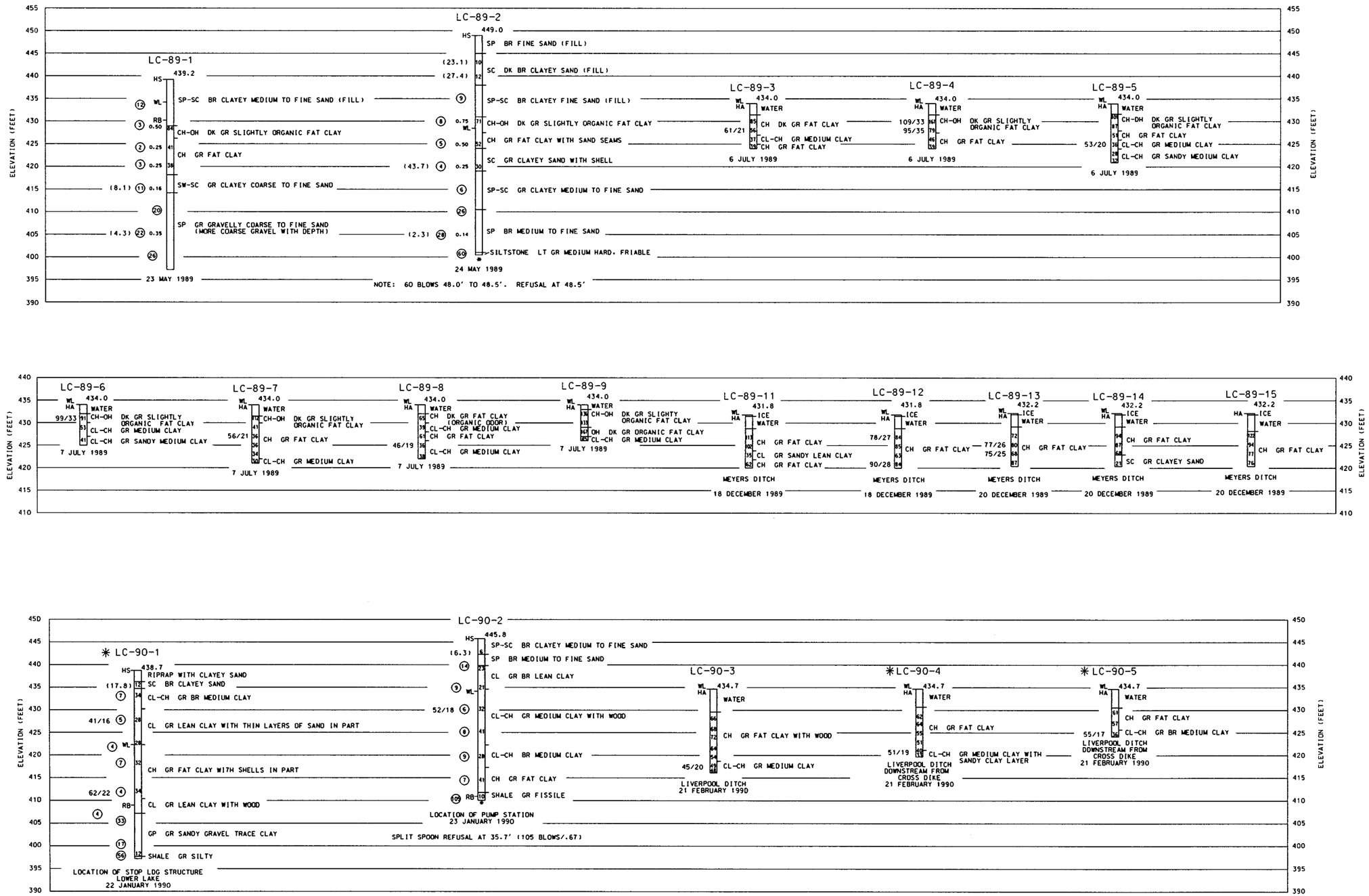

SEE PLAN SHEET X30 FOR APPROXIMATE LOCATION OF BORINGS

STA AND OFFSET REFER TO STAGE I ALIGNMENT.

US Army Corps of Engineers
Rock Island District

Symbol	Description	Date	Approved
	Revisions		

Designed By: EGR		Date: MAR 1999	
Drawn By: TDL-CJK		Scale: AS SHOWN	
Checked By: EGR		Drawing Code: 1-L1-3-1/67	
Reviewed By: GJM		Solicitation Number: DACW25-97-B-0032	

U.S. ARMY ENGINEER DISTRICT
CORPS OF ENGINEERS
ROCK ISLAND, ILLINOIS

ILLINOIS WATERWAY
ENVIRONMENTAL MANAGEMENT PROGRAM
LA GRANGE POOL, MILE 124 TO 129.5
LAKE CHAUTAUQUA
OPERATIONS AND MAINTENANCE

BORING LOGS I

Sheet Reference Number:
B10
Sheet 4 of 84

02-MAR-2005 08:19
mmcrdf$cc00$Projects$EPS2$DGN Manual - Use this onlmpd32b010.dgn

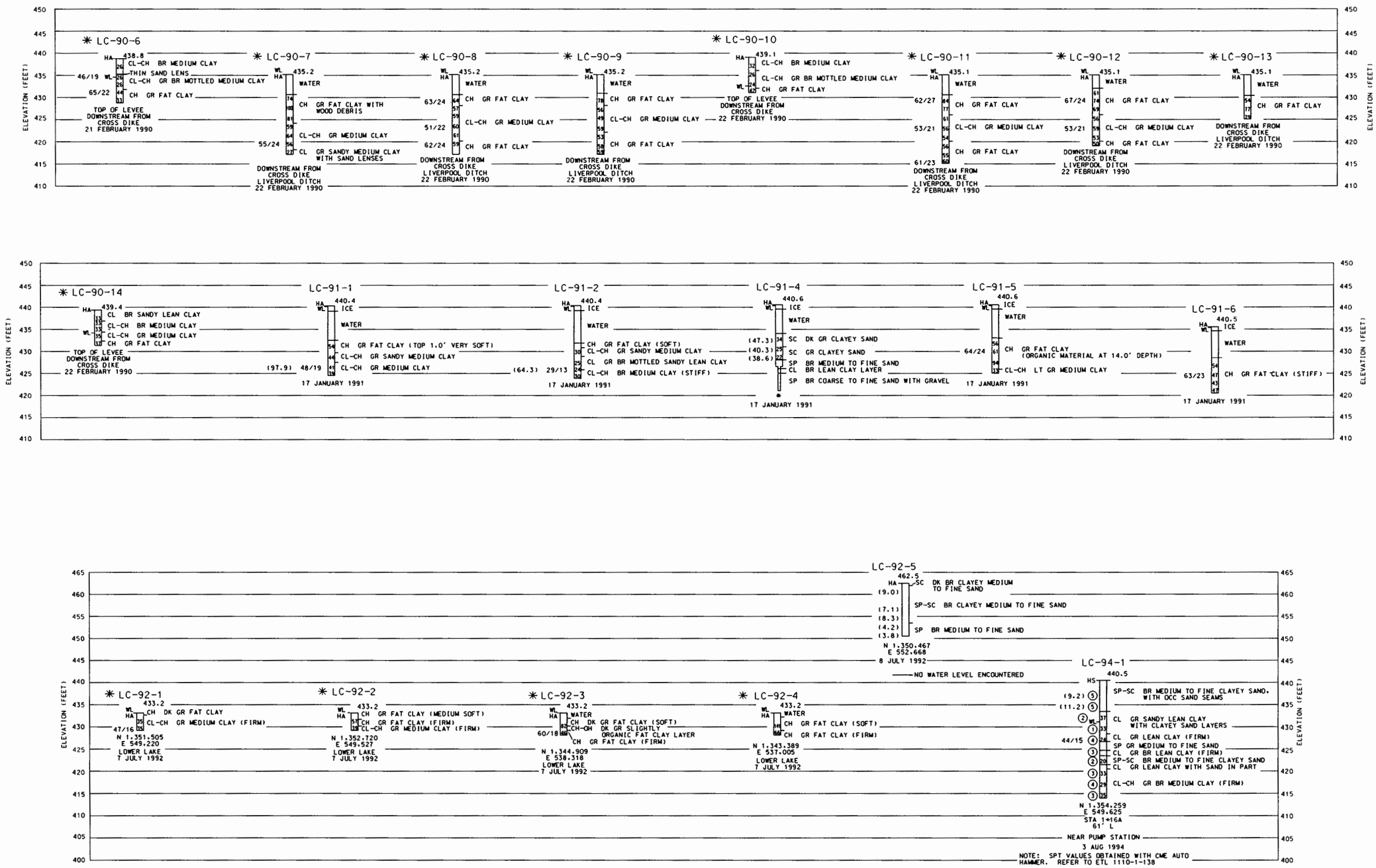

SEE PLAN SHEET X30 FOR APPROXIMATE LOCATION OF BORINGS

STA AND OFFSET REFER TO STAGE I ALIGNMENT

US Army Corps of Engineers
Rock Island District

Symbol	Description	Date	Approved

Revisions

Designed By: EGR		Date: MAR 1999	
Drawn By: TDL - CJK		Scale: AS SHOWN	
Checked By: EGR		Drawing Code: 1-L1-3-1/67	
Reviewed By: GJM		Solicitation Number: DACW25-97-B-0032	

U.S. ARMY ENGINEER DISTRICT
CORPS OF ENGINEERS
ROCK ISLAND, ILLINOIS

ILLINOIS WATERWAY
ENVIRONMENTAL MANAGEMENT PROGRAM
LA GRANGE POOL - MILE 124 TO 129.5
LAKE CHAUTAUQUA
OPERATIONS AND MAINTENANCE

BORING LOGS II

Sheet Reference Number:
B20
Sheet 5 of 84

02-MAR-2005 08:32
mmorris:m:\cadd\projects\EP52\DGN Manual - Use this one\ep520020.dgn

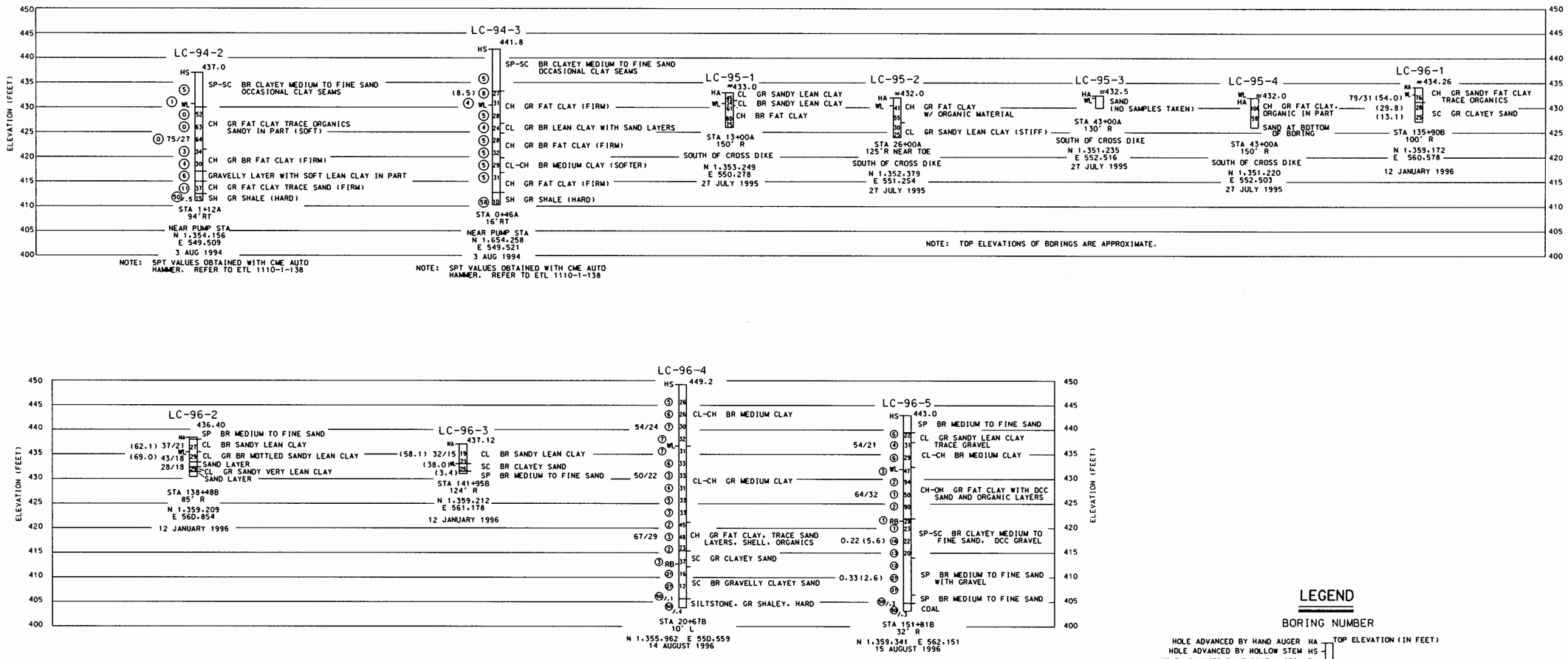

LEGEND

BORING NUMBER

HOLE ADVANCED BY HAND AUGER HA
HOLE ADVANCED BY HOLLOW STEM HS
HOLE ADVANCED BY FLIGHT AUGER FA
HOLE ADVANCED WITH ROLLER BIT RB
WATER LEVEL WL

TOP ELEVATION (IN FEET)

PERCENT PASSING #200 SIEVE (6.7)
LIQUID AND PLASTIC LIMIT 46/28
POCKET PENETROMETER READING (T/SF) 0.23
D_{10} SIZE (MM) 0.19

21 NATURAL MOISTURE CONTENT IN PERCENT DRY WEIGHT

NUMBER OF BLOWS TO DRIVE STANDARD SPLIT SPOON (2" O.D.) ONE FOOT WITH 140 LB HAMMER AND 30 INCH DROP BLOW COUNTS ARE FOR ONE FOOT DRIVE UNLESS OTHERWISE INDICATED BY /.

MAJOR STRATA CHANGE

MINOR STRATA CHANGE

HOLE EXTENDED BY DRIVING 2 INCH PIPE
PROBE OR SPLIT SPOON REFUSAL

LOCATION OF BORING 4 JULY 1996
APPROXIMATE DATE OF DRILLING ALSO, DATE WATER LEVEL NOTED

✳ BORINGS TAKEN AT LOWER LAKE. NOT SHOWN ON PLAN SHEET X3

SEE PLAN SHEET X30 FOR APPROXIMATE LOCATION OF BORINGS

STA AND OFFSET REFER TO STAGE I ALIGNMENT.

US Army Corps of Engineers Rock Island District

Symbol	Description	Date	Approved

Revisions

Designed By: DRC
Drawn By: CAB
Checked By: TGH
Reviewed By: JJC
Date: MAR 1999
Scale: AS SHOWN
Drawing Code: 1-L1-3-1/67
Solicitation Number: DACW25-97-B-0032

U.S. ARMY ENGINEER DISTRICT CORPS OF ENGINEERS ROCK ISLAND, ILLINOIS

ILLINOIS WATERWAY ENVIRONMENTAL MANAGEMENT PROGRAM LA GRANGE POOL, MILE 124 TO 129.5 LAKE CHAUTAUQUA OPERATIONS AND MAINTENANCE

BORING LOGS III

Sheet Reference Number: B30

Sheet 6 of 84

02-MAR-2005 08:33

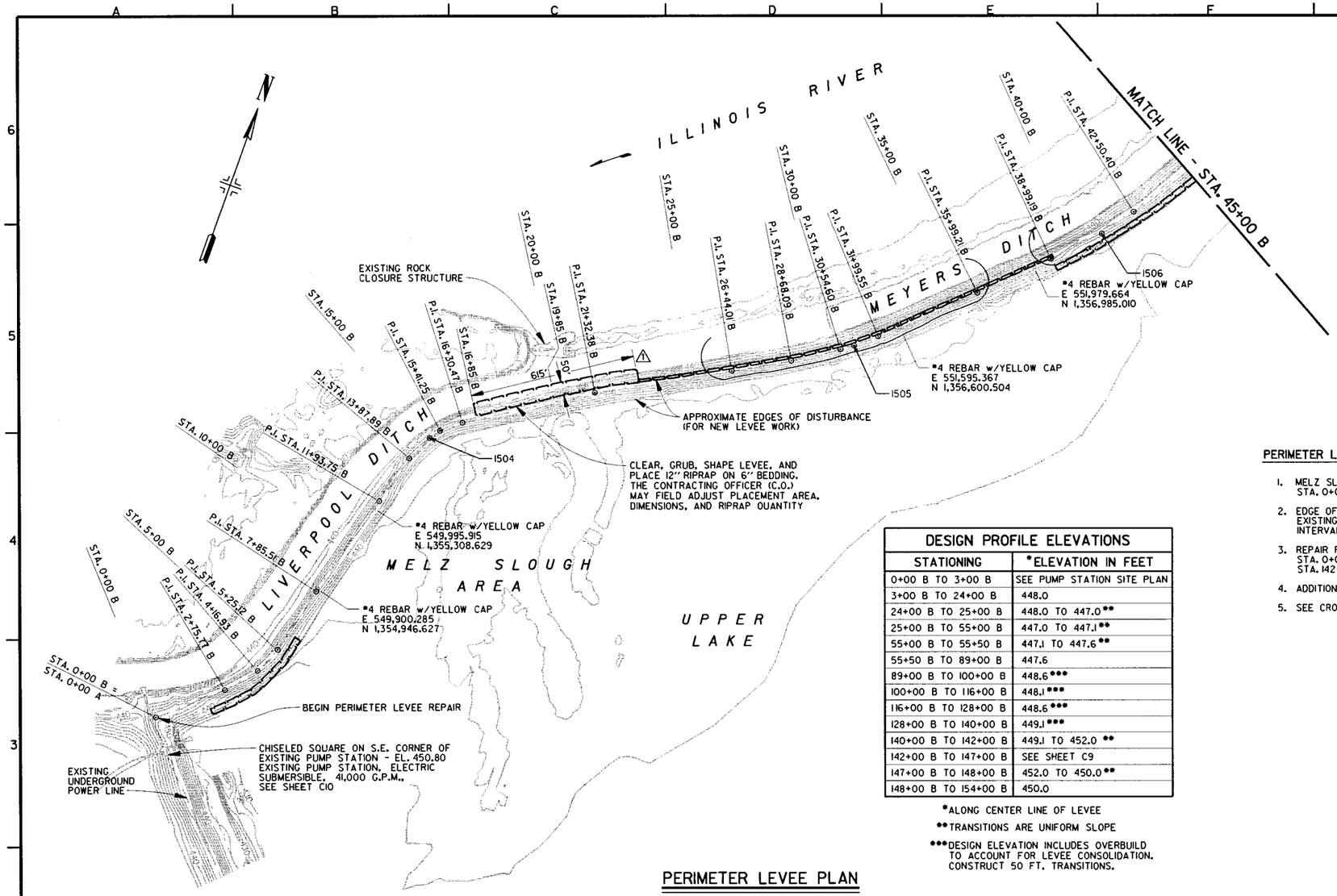

PERIMETER LEVEE PLAN

100 0 200 400 600
SCALE IN FEET

DESIGN ALIGNMENT CONTROL POINTS	
P.I. STATION	COORDINATE LOCATION
0+00 B	E 549,501.569 - N 1,354,302.448
2+75.77 B	E 549,707.860 - N 1,354,485.459
4+16.93 B	E 549,798.025 - N 1,354,594.073
5+25.12 B	E 549,839.825 - N 1,354,691.255
7+85.51 B	E 549,901.656 - N 1,354,946.443
11+93.75 B	E 550,005.317 - N 1,355,341.307
13+87.89 B	E 550,054.454 - N 1,355,529.125
15+41.25 B	E 550,126.971 - N 1,355,664.251
16+30.47 B	E 550,195.888 - N 1,355,720.916
21+32.38 B	E 550,617.81 - N 1,355,992.75
26+44.01 B	E 551,064.853 - N 1,356,241.588
28+68.09 B	E 551,260.000 - N 1,356,351.724
30+54.60 B	E 551,416.021 - N 1,356,453.922
31+99.55 B	E 551,528.252 - N 1,356,545.650
35+99.21 B	E 551,816.858 - N 1,356,822.115
38+99.19 B	E 552,030.187 - N 1,357,033.018
42+50.40 B	E 552,256.848 - N 1,357,301.303

DESIGN PROFILE ELEVATIONS	
STATIONING	*ELEVATION IN FEET
0+00 B TO 3+00 B	SEE PUMP STATION SITE PLAN
3+00 B TO 24+00 B	448.0
24+00 B TO 25+00 B	448.0 TO 447.0**
25+00 B TO 55+00 B	447.0 TO 447.1**
55+00 B TO 55+50 B	447.1 TO 447.6**
55+50 B TO 89+00 B	447.6
89+00 B TO 100+00 B	448.6***
100+00 B TO 116+00 B	448.1***
116+00 B TO 128+00 B	448.6***
128+00 B TO 140+00 B	449.1***
140+00 B TO 142+00 B	449.1 TO 452.0 **
142+00 B TO 147+00 B	SEE SHEET C9
147+00 B TO 148+00 B	452.0 TO 450.0**
148+00 B TO 154+00 B	450.0

*ALONG CENTER LINE OF LEVEE

**TRANSITIONS ARE UNIFORM SLOPE

***DESIGN ELEVATION INCLUDES OVERBUILD TO ACCOUNT FOR LEVEE CONSOLIDATION. CONSTRUCT 50 FT. TRANSITIONS.

PERIMETER LEVEE GENERAL NOTES:

1. MELZ SLOUGH AREA SHALL NOT BE DISTURBED. ADJACENT BORROW BETWEEN STA. 0+00B AND STA. 40+00B IS NOT ALLOWED.
2. EDGE OF DISTURBANCE MAY VARY FROM THAT SHOWN. CONTOURS SHOW GENERAL EXISTING TOPOGRAPHY. ACTUAL GROUND ELEVATIONS MAY VARY. CONTOUR INTERVAL IS 2.0 FEET.
3. REPAIR PERIMETER LEVEE ALONG THE DESIGN ALIGNMENT FROM STA. 0+00B TO STA. 154+00B. CELLULAR SHEET PILE CELLS EXTEND FROM STA. 142+76.33B TO STA. 146+13.29B. SEE TYPICAL SECTIONS ON SHEET C120.
4. ADDITIONAL CONTROL POINTS ARE AVAILABLE UPON REQUEST.
5. SEE CROSS SECTIONS ON SHEET C120 FOR BORROW REQUIREMENTS.

HORIZONTAL CONTROL POINT TIE OFFS
NOTE: ALL TIES ARE MAG NAIL IN TREE
• 5/8" REBAR - 48" LONG W/ WHZ CAP
(NOT TO SCALE)

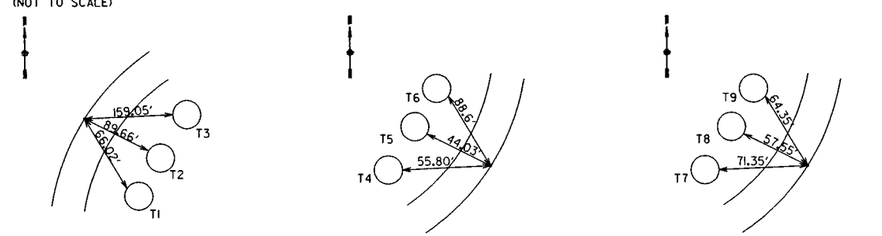

CONTROL POINT # 1504
APPROX. STA 14+95
E 550,102.57846 - N 1,355,628.27339

CONTROL POINT # 1505
APPROX. STA 31+06
E 551,456.83836 - N 1,356,480.1488

CONTROL POINT # 1506
APPROX. STA 41+14
E 552,169.74244 - N 1,357,177.56363

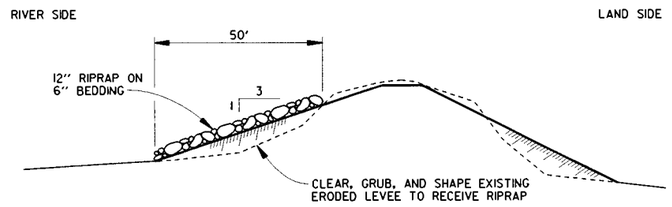

TYPICAL RIPRAP SECTION

STA. 16+85 B TO STA. 23+00 B

NO SCALE

US Army Corps of Engineers Rock Island District

Symbol	Description	Date	Approved
1	REVISED AS CONSTRUCTED	26AUG04	DRC/RAL

Revisions

Designed By: DRC
Drawn By: DRC - CAB
Checked By: ERK
Reviewed By: JJC
Date: MAR 1999
Scale: AS SHOWN
Drawing Code: 1-L1-3-1/67
Solicitation Number: DACW25-97-B-0032

U.S. ARMY ENGINEER DISTRICT CORPS OF ENGINEERS ROCK ISLAND, ILLINOIS

ILLINOIS WATERWAY
ENVIRONMENTAL MANAGEMENT PROGRAM
LA GRANGE POOL, MILE 124 TO 129.5
LAKE CHAUTAUQUA
OPERATIONS AND MAINTENANCE

PERIMETER LEVEE PLAN STA. 0+00 B TO STA. 45+00 B

Sheet Reference Number: C10
Sheet 7 of 84

02-MAR-2005 08:34

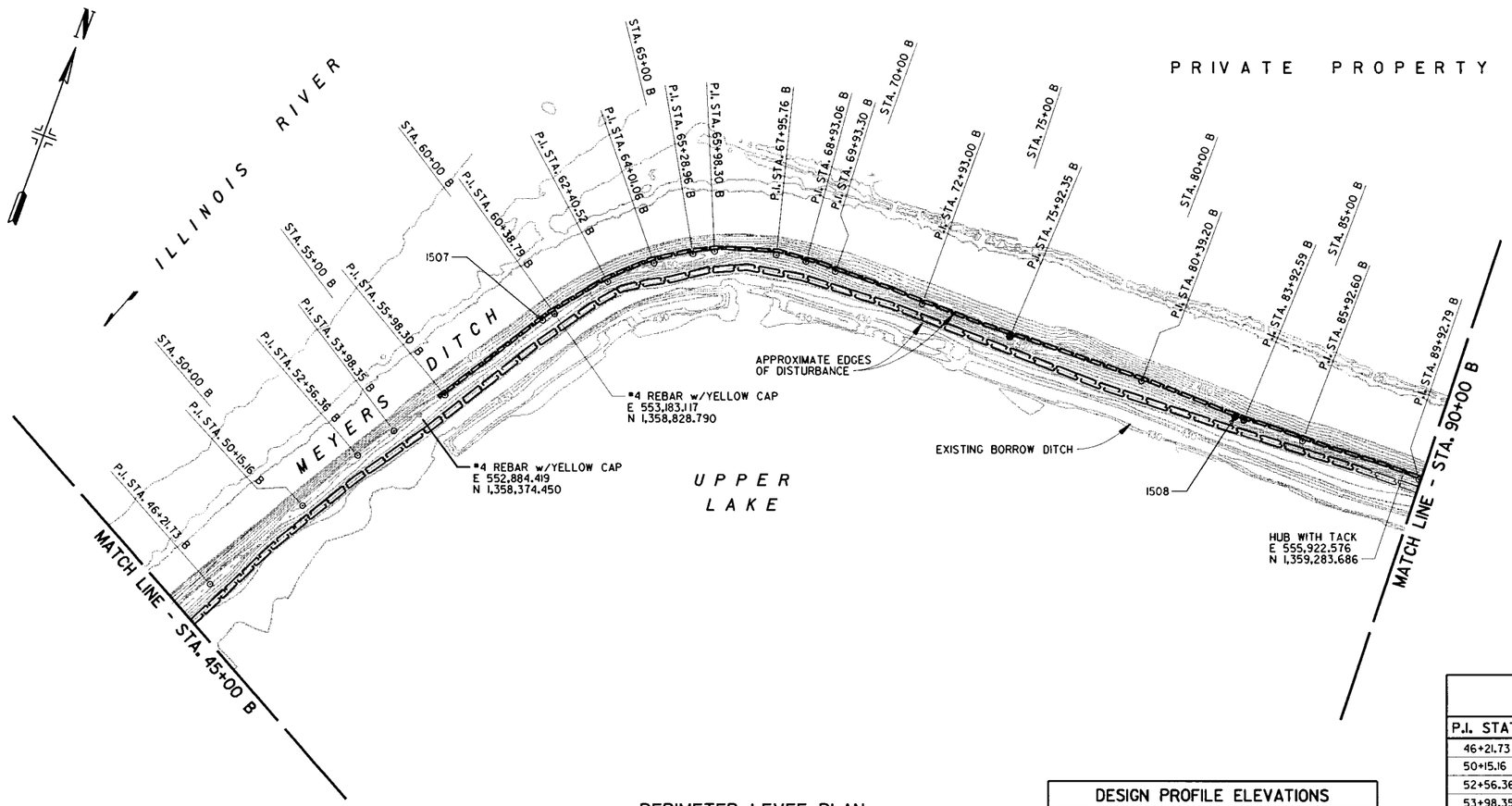

PERIMETER LEVEE PLAN

100 0 200 400 600
SCALE IN FEET

HORIZONTAL CONTROL POINT TIE OFFS
NOTE: ALL TIES ARE MAG NAIL IN TREE
+ ⅝" REBAR - 48" LONG W/ WHZ CAP
(NOT TO SCALE)

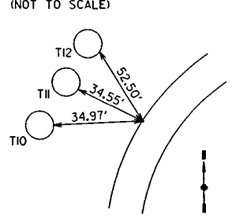

CONTROL POINT # 1507
APPROX. STA 59+96
E 553,157.14413 - N 1,358,800.15935

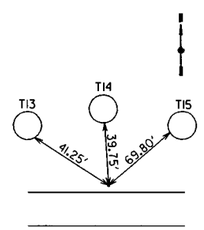

CONTROL POINT # 1508
APPROX. STA 83+62
E 555,053.71434 - N 1,359,276.47195

DESIGN PROFILE ELEVATIONS

STATIONING	*ELEVATION IN FEET
0+00 B TO 3+00 B	SEE PUMP STATION SITE PLAN
3+00 B TO 24+00 B	448.0
24+00 B TO 25+00 B	448.0 TO 447.0**
25+00 B TO 55+00 B	447.0 TO 447.1**
55+00 B TO 55+50 B	447.1 TO 447.6**
55+50 B TO 89+00 B	447.6
89+00 B TO 100+00 B	448.6***
100+00 B TO 116+00 B	448.1***
116+00 B TO 128+00 B	448.6***
128+00 B TO 140+00 B	449.1***
140+00 B TO 142+00 B	449.1 TO 452.0 **
142+00 B TO 147+00 B	SEE SHEET C9
147+00 B TO 148+00 B	452.0 TO 450.0**
148+00 B TO 154+00 B	450.0

*ALONG CENTER LINE OF LEVEE

**TRANSITIONS ARE UNIFORM SLOPE

***DESIGN ELEVATION INCLUDES OVERBUILD TO ACCOUNT FOR LEVEE CONSOLIDATION. CONSTRUCT 50 FT. TRANSITIONS.

DESIGN ALIGNMENT CONTROL POINTS

P.I. STATION	COORDINATE LOCATION
46+21.73 B	E 552,438.807 - N 1,357,624.993
50+15.16 B	E 552,633.029 - N 1,357,967.139
52+56.36 B	E 552,744.325 - N 1,358,181.124
53+98.35 B	E 552,827.645 - N 1,358,296.104
55+98.30 B	E 552,941.137 - N 1,358,460.722
60+38.79 B	E 553,183.117 - N 1,358,828.790
62+40.52 B	E 553,309.757 - N 1,358,985.817
64+01.06 B	E 553,429.260 - N 1,359,093.017
65+28.96 B	E 553,535.812 - N 1,359,163.771
65+98.30 B	E 553,597.518 - N 1,359,195.399
67+95.76 B	E 553,786.715 - N 1,359,251.922
68+93.06 B	E 553,883.236 - N 1,359,264.187
69+93.30 B	E 553,983.459 - N 1,359,265.866
72+93.00 B	E 554,283.158 - N 1,359,264.787
75+92.35 B	E 554,582.481 - N 1,359,260.850
80+39.20 B	E 555,029.239 - N 1,359,270.172
83+92.59 B	E 555,382.593 - N 1,359,265.071
85+92.60 B	E 555,582.602 - N 1,359,265.345
89+92.79 B	E 555,982.649 - N 1,359,276.092

NOTE:
SEE PERIMETER LEVEE GENERAL NOTES ON SHEET C10.

US Army Corps of Engineers
Rock Island District

Symbol	Description	Date	Approved
	Revisions		

Designed By: DRC
Drawn By: RLC - CAB
Checked By: ERK
Reviewed By: JJC
Date: MAR 1999
Scale: AS SHOWN
Drawing Code: 1-L1-3-1/67
Solicitation Number: DACW25-97-B-0032

U.S. ARMY ENGINEER DISTRICT
CORPS OF ENGINEERS
ROCK ISLAND, ILLINOIS

ILLINOIS WATERWAY
ENVIRONMENTAL MANAGEMENT PROGRAM
LA GRANGE POOL, MILE 124 TO 129.5
LAKE CHAUTAUQUA
OPERATIONS AND MAINTENANCE
PERIMETER LEVEE PLAN
STA. 45+00 B TO STA. 90+00 B

Sheet Reference Number:
C20
Sheet 8 of 84

02-MAR-2005 14:03
Weworkforce2005\Projects\EP52\EOM Manual - Use this ordnep52c020.dgn

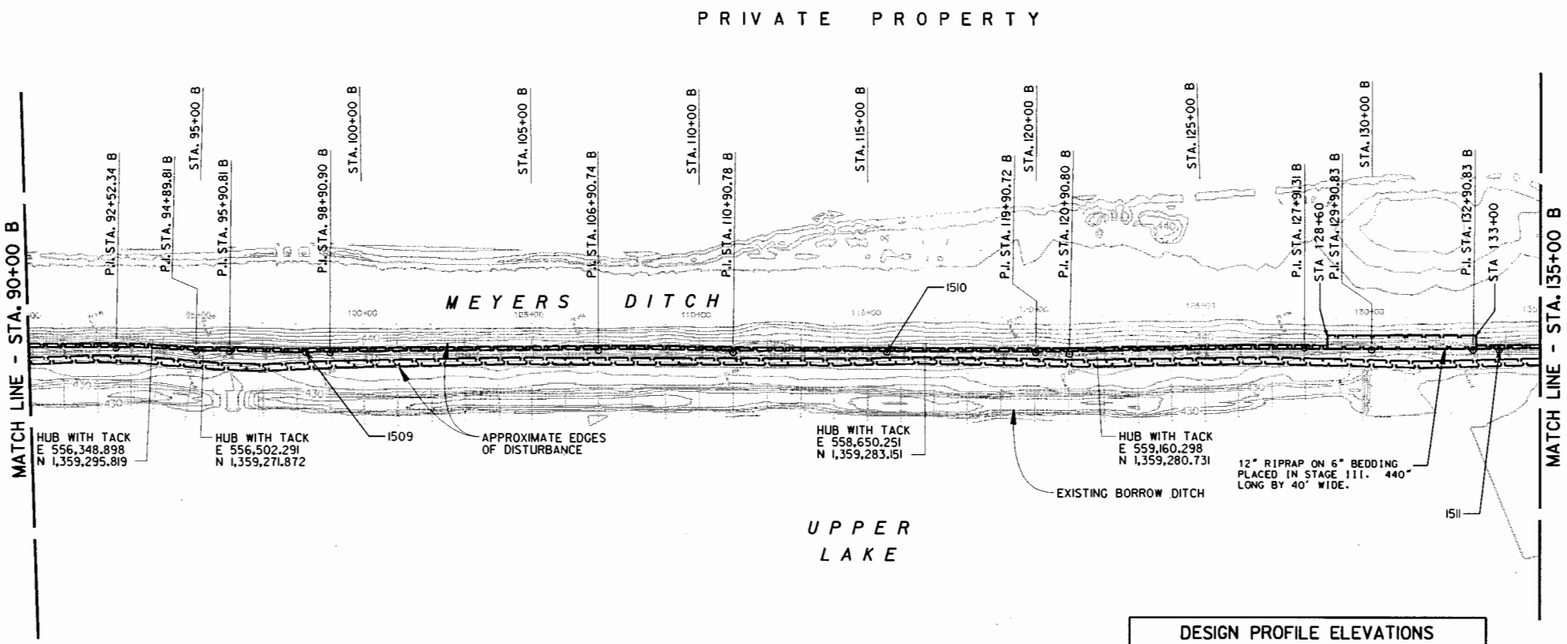

PERIMETER LEVEE PLAN

100 0 200 400 600
SCALE IN FEET

DESIGN PROFILE ELEVATIONS	
STATIONING	*ELEVATION IN FEET
0+00 B TO 3+00 B	SEE PUMP STATION SITE PLAN
3+00 B TO 24+00 B	448.0
24+00 B TO 25+00 B	448.0 TO 447.0**
25+00 B TO 55+00 B	447.0 TO 447.1**
55+00 B TO 55+50 B	447.1 TO 447.6**
55+50 B TO 89+00 B	447.6
89+00 B TO 100+00 B	448.6***
100+00 B TO 116+00 B	448.1***
116+00 B TO 128+00 B	448.6***
128+00 B TO 140+00 B	449.1***
140+00 B TO 142+00 B	449.1 TO 452.0 **
142+00 B TO 147+00 B	SEE SHEET C9
147+00 B TO 148+00 B	452.0 TO 450.0**
148+00 B TO 154+00 B	450.0

*ALONG CENTER LINE OF LEVEE

**TRANSITIONS ARE UNIFORM SLOPE

***DESIGN ELEVATION INCLUDES OVERBUILD TO ACCOUNT FOR LEVEE CONSOLIDATION. CONSTRUCT 50 FT. TRANSITIONS.

DESIGN ALIGNMENT CONTROL POINTS	
P.I. STATION	COORDINATE LOCATION
92+52.34 B	E 556,242.191 - N 1,359,277.789
94+89.81 B	E 556,479.438 - N 1,359,267.545
95+90.81 B	E 556,580.437 - N 1,359,267.529
98+90.90 B	E 556,880.508 - N 1,359,263.607
106+90.74 B	E 557,680.298 - N 1,359,271.877
110+90.78 B	E 558,080.294 - N 1,359,265.878
119+90.72 B	E 558,980.236 - N 1,359,267.484
120+90.80 B	E 559,080.217 - N 1,359,263.111
127+91.31 B	E 559,780.459 - N 1,359,282.544
129+90.83 B	E 559,979.895 - N 1,359,276.741
132+90.83 B	E 560,279.898 - N 1,359,276.776

NOTE:
SEE PERIMETER LEVEE GENERAL NOTES ON SHEET C10.

HORIZONTAL CONTROL POINT TIE OFFS
NOTE: ALL TIES ARE MAG NAIL IN TREE
- 5/8" REBAR - 48" LONG W/ WHZ CAP
(NOT TO SCALE)

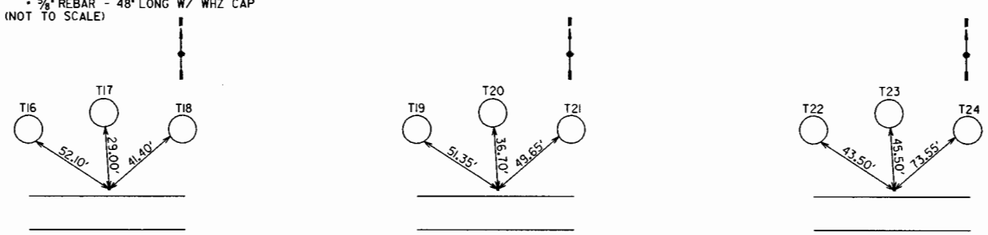

CONTROL POINT # 1509
APPROX. STA 98+20
E 556,809.18995 - N 1,359,269.99611

CONTROL POINT # 1510
APPROX. STA 115+48
E 558,537.64667 - N 1,359,267.97761

CONTROL POINT # 1511
APPROX. STA 133+68
E 560,357.30659 - N 1,359,271.65323

US Army Corps of Engineers
Rock Island District

Symbol	Description	Date	Approved
	Revisions		

Designed By: DRC
Date: MAR 1999
Drawn By: RLC - CAB
Scale: AS SHOWN
Checked By: ERK
Drawing Code: 1-L1-3-1/67
Reviewed By: JJC
Solicitation Number: DACW25-97-B-0032

U.S. ARMY ENGINEER DISTRICT
CORPS OF ENGINEERS
ROCK ISLAND, ILLINOIS

ILLINOIS WATERWAY
ENVIRONMENTAL MANAGEMENT PROGRAM
LA GRANGE POOL, MILE 124 TO 129.5
LAKE CHAUTAUQUA
OPERATIONS AND MAINTENANCE
PERIMETER LEVEE PLAN
STA. 90+00 B TO STA. 135+00 B

Sheet Reference Number:
C30
Sheet 9 of 84

02-MAR-2005 14:00
wmcr079c0008Projects\EFS2\DGM Manual - Use this only\ef52c030.dgn

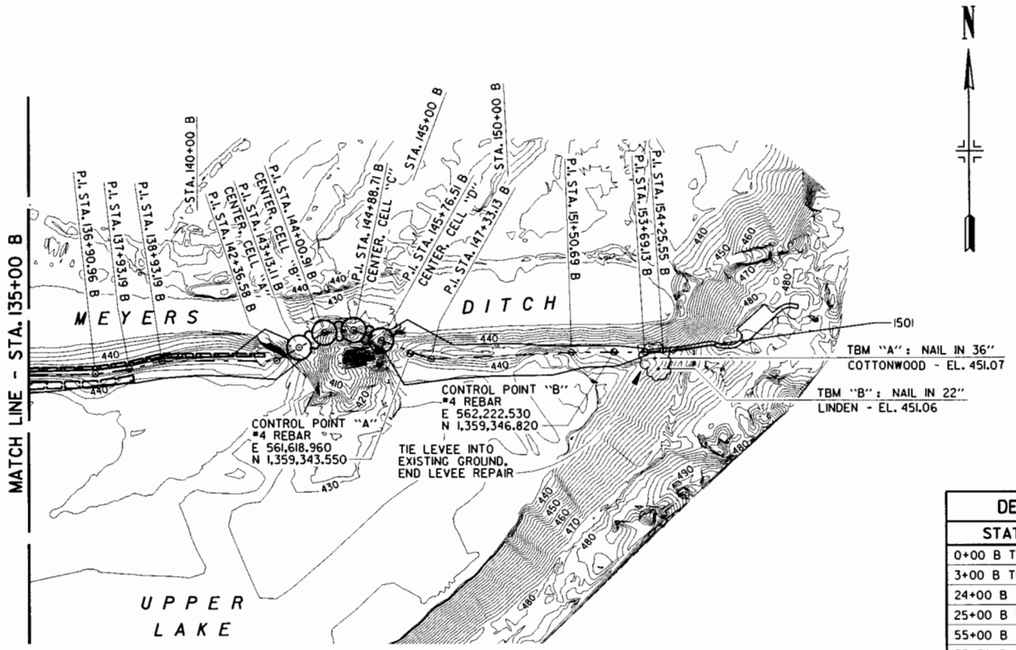

PERIMETER LEVEE PLAN

100 0 200 400 600
SCALE IN FEET

DESIGN ALIGNMENT CONTROL POINTS		
P.I. STATION	COORDINATE LOCATION	NOTES
136+90.96 B	E 560,679.921 - N 1,359,285.857	
137+93.19 B	E 560,781.124 - N 1,359,300.303	
138+93.19 B	E 560,878.434 - N 1,359,323.342	
142+36.58 B	E 561,221.824 - N 1,359,323.342	
143+13.11 B	E 561,287.670 - N 1,359,362.355	CENTER, CELL "A"
144+00.91 B	E 561,363.207 - N 1,359,407.110	CENTER, CELL "B"
144+88.71 B	E 561,450.680 - N 1,359,414.680	CENTER, CELL "C"
145+76.51 B	E 561,532.783 - N 1,359,383.568	CENTER, CELL "D"
147+33.13 B	E 561,679.233 - N 1,359,328.063	
151+50.69 B	E 562,096.390 - N 1,359,346.376	
153+69.16 B	E 562,314.863 - N 1,359,347.253	
154+25.55 B	E 562,371.007 - N 1,359,352.478	

DESIGN PROFILE ELEVATIONS	
STATIONING	*ELEVATION IN FEET
0+00 B TO 3+00 B	SEE PUMP STATION SITE PLAN
3+00 B TO 24+00 B	448.0
24+00 B TO 25+00 B	448.0 TO 447.0**
25+00 B TO 55+00 B	447.0 TO 447.1**
55+00 B TO 55+50 B	447.1 TO 447.6**
55+50 B TO 89+00 B	447.6
89+00 B TO 100+00 B	448.6***
100+00 B TO 116+00 B	448.1***
116+00 B TO 128+00 B	448.6***
128+00 B TO 140+00 B	449.1***
140+00 B TO 142+00 B	449.1 TO 452.0 **
142+00 B TO 147+00 B	SEE SHEET C9
147+00 B TO 148+00 B	452.0 TO 450.0**
148+00 B TO 154+00 B	450.0

*ALONG CENTER LINE OF LEVEE

**TRANSITIONS ARE UNIFORM SLOPE

***DESIGN ELEVATION INCLUDES OVERBUILD TO ACCOUNT FOR LEVEE CONSOLIDATION. CONSTRUCT 50 FT. TRANSITIONS.

NOTE:
SEE PERIMETER LEVEE GENERAL NOTES ON SHEET C10.

HORIZONTAL CONTROL POINT TIE OFFS
NOTE: ALL TIES ARE MAG NAIL IN TREE
* 5/8" REBAR - 48" LONG W/ WHZ CAP
(NOT TO SCALE)

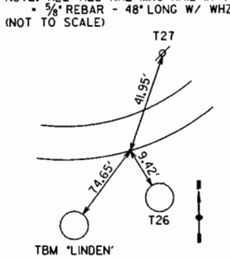

CONTROL POINT * 1501
APPROX. STA 154+55
E 562,400.8875 - N 1,359,332.001

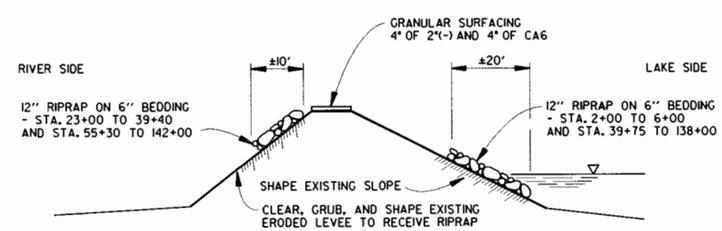

TYPICAL RIPRAP SECTION USFWS PROJECT

NO SCALE

US Army Corps of Engineers
Rock Island District

Symbol	Description	Date	Approved
	Revisions		

Designed By: DRC
Drawn By: RLC - CAB
Checked By: ERK
Reviewed By: JJC
Date: MAR 1999
Scale: AS SHOWN
Drawing Code: 1-L1-3-1/67
Solicitation Number: DACW25-97-B-0032

U.S. ARMY ENGINEER DISTRICT
CORPS OF ENGINEERS
ROCK ISLAND, ILLINOIS

ILLINOIS WATERWAY
ENVIRONMENTAL MANAGEMENT PROGRAM
LA GRANGE POOL, MILE 124 TO 129.5
LAKE CHAUTAUQUA
OPERATIONS AND MAINTENANCE

PERIMETER LEVEE PLAN
STA. 135+00 B TO
STA. 154+10.67 B

Sheet Reference Number:
C40
Sheet 10 of 84

02-MAR-2005 12:34
e:\mrd\f6\cad\dgn\projects\ep52\dgn manual - Use this cell\ep52c040.dgn

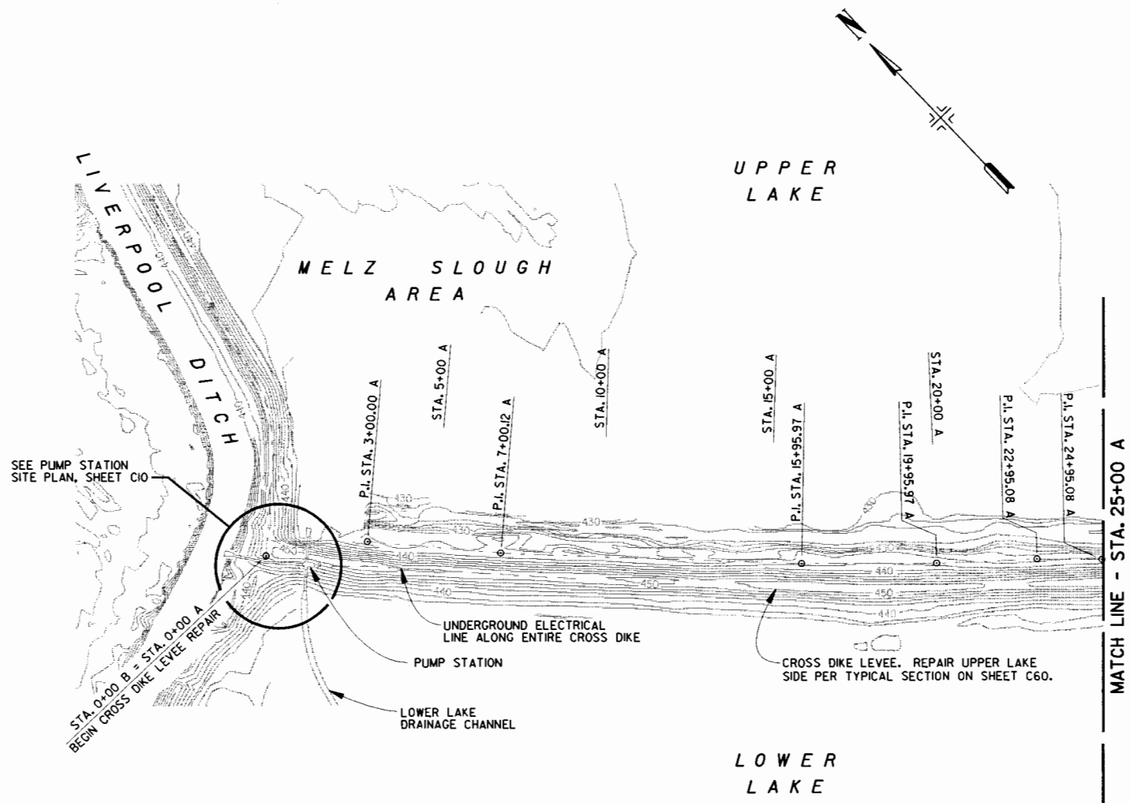

CROSS DIKE PLAN

DESIGN ALIGNMENT TOE OF UPPER LAKE LEVEE SLOPE	
P.I. STATION	COORDINATE LOCATION
3+00.00 A	E 549,750.787 - N 1,354,124.583
7+00.12 A	E 550,016.181 - N 1,353,825.147
15+95.97 A	E 550,642.949 - N 1,353,185.058
19+95.97 A	E 550,933.754 - N 1,352,910.408
22+95.08 A	E 551,159.032 - N 1,352,713.648
24+95.08 A	E 551,302.976 - N 1,352,574.791

CONTROL POINTS:

C.L. #12: 5/8" PIN WITH BRASS CAP
E 553,241.932 - N 1,350,718.597

C.L. #13: 5/8" PIN WITH BRASS CAP
E 552,765.884 - N 1,350,164.116

CHISELED "X": LOCATED TOP CENTER OF PUMP STATION
E 549,572.51 - N 1,354,198.19

CHISELED "□": LOCATED ON S.E. CORNER OF EXISTING PUMP STATION - EL. 450.80

CROSS DIKE GENERAL NOTES:

1. EDGE OF DISTURBANCE MAY VARY FROM THAT SHOWN. CONTOURS SHOW GENERAL EXISTING TOPOGRAPHY. ACTUAL GROUND ELEVATIONS MAY VARY. CONTOUR INTERVAL IS 2.0 FEET. THE CROSS DIKE LEVEE WAS GRADED AND SEEDED AFTER THE 1996 SURVEY. ROCK SURFACING WAS PLACED ALONG LEVEE TOP.
2. REPAIR CROSS DIKE LEVEE ALONG THE DESIGN ALIGNMENT FROM STA. 0+00A TO APPROXIMATE STA. 45+00A, SEE TYPICAL SECTION ON SHEET C60 AND PUMP STATION SITE PLAN ON SHEET C10. SEE PARKING AREA PLAN AND BOAT RAMP FOR ADDITIONAL WORK.
3. EXISTING CONTRACT DACW25-92-C-0079 IS ON-GOING. THE PUMP STATION IS BEING COMPLETED AS WELL AS OTHER MISCELLANEOUS ITEMS. U.S.F.W.S. IS PERFORMING WORK IN AND AROUND THE LOWER LAKE. THE CONTRACTOR SHALL COORDINATE ITS WORK WITH THE EXISTING CONTRACTOR AND U.S.F.W.S. SO THAT ON-GOING WORK IS NOT INTERRUPTED, SEE SPECIFICATIONS.
4. SEE REFERENCE DRAWINGS FOR LEVEE SECTION SURVEY INFORMATION.

US Army Corps of Engineers Rock Island District

Symbol	Description	Date	Approved

Revisions

Designed By: DRC
Date: MAR 1999
Drawn By: RLC - CAB
Scale: AS SHOWN
Checked By: ERK
Drawing Code: 1-L-1-3-1/67
Reviewed By: JJC
Solicitation Number: DACW25-97-B-0032

U.S. ARMY ENGINEER DISTRICT
CORPS OF ENGINEERS
ROCK ISLAND, ILLINOIS

ILLINOIS WATERWAY
ENVIRONMENTAL MANAGEMENT PROGRAM
LA GRANGE POOL, MILE 124 TO 129.5
LAKE CHAUTAUQUA
OPERATIONS AND MAINTENANCE
CROSS DIKE PLAN
STA. 0+00 A TO STA. 25+00 A

Sheet Reference Number:
C50
Sheet 11 of 84

02-MAR-2005 14:04
e:\mvr\fr\ecodsp\projects\ep52\pdm Manual - Use this only\ep52c050.dgn

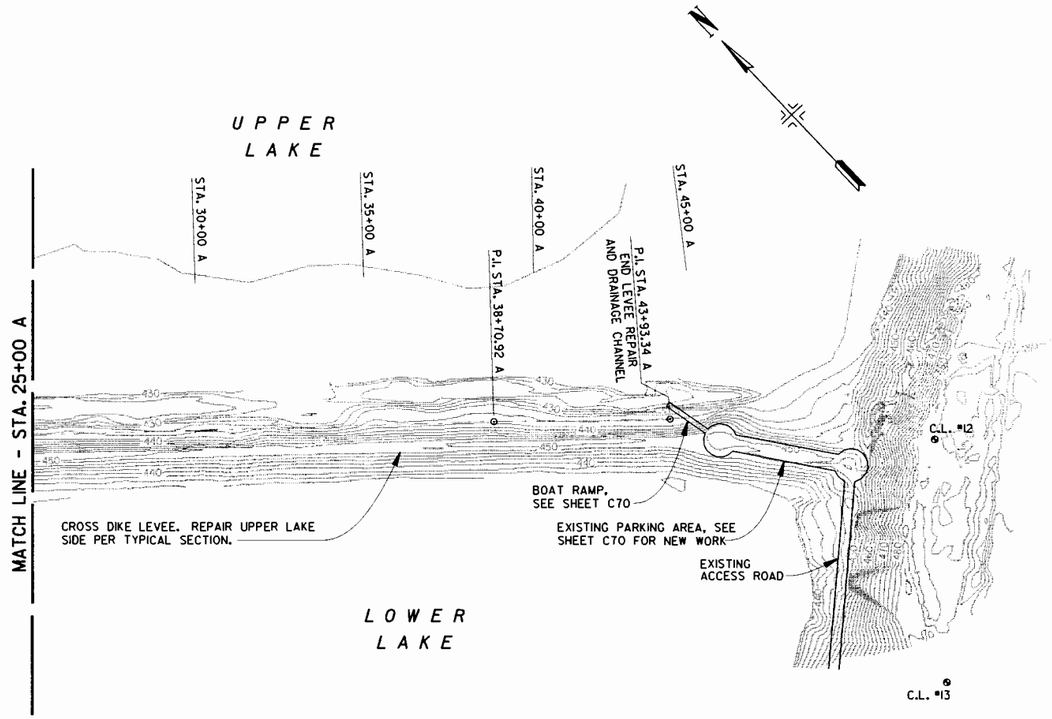

CROSS DIKE PLAN

100 0 200 400 600
SCALE IN FEET

DESIGN ALIGNMENT TOE OF UPPER LAKE LEVEE SLOPE	
P.I. STATION	COORDINATE LOCATION
38+70.92 A	E 552,328.427 - N 1,351,657.528
43+93.34 A	E 552,712.679 - N 1,351,303.583

NOTES:

1. SEE CROSS DIKE GENERAL NOTES ON SHEET C50.
2. SEE SHEET C50 FOR DESCRIPTION OF CONTROL POINTS C.L. #12 AND C.L. #13.
3. SEE SHEET C110 FOR WORK FROM STA. 0+00 A TO STA. 5+00 A.
4. SEE SHEET C70 FOR WORK FROM STA. 45+00 A TO EXISTING ACCESS ROAD.

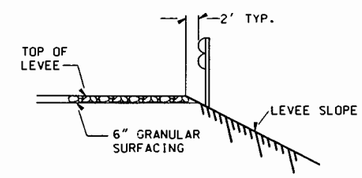

SECTION A-A

NO SCALE

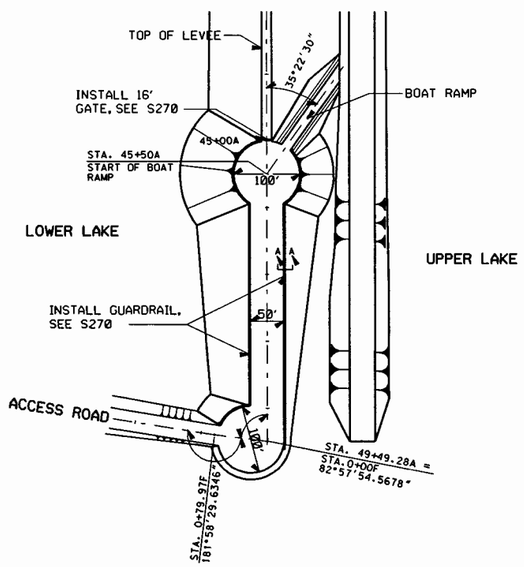

PARKING AREA DETAIL

100 50 0 100 200FT
SCALE IN FEET

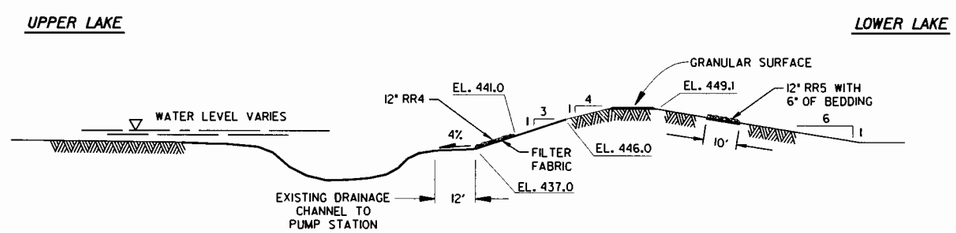

CROSS DIKE LEVEE TYPICAL SECTION

APPROXIMATE STA. 3+00A TO STA. 45+00A

10 0 20 40 60
SCALE IN FEET

US Army Corps of Engineers
Rock Island District

Symbol	Description	Date	Approved
AS CONSTRUCTED		26AUG04	DRC/RAL

Revisions

Designed By: DRC
Date: MAR 1999
Drawn By: RLC - CAB
Scale: AS SHOWN
Checked By: ERK
Drawing Code: 1-L1-3-1/67
Reviewed By: JJC
Solicitation Number: DACW25-97-B-0032

U.S. ARMY ENGINEER DISTRICT
CORPS OF ENGINEERS
ROCK ISLAND, ILLINOIS

ILLINOIS WATERWAY
ENVIRONMENTAL MANAGEMENT PROGRAM
LA GRANGE POOL, MILE 124 TO 129.5
LAKE CHAUTAUQUA
OPERATIONS AND MAINTENANCE

CROSS DIKE PLAN
STA. 25+00 A TO STA. 44+93.88 A

Sheet Reference Number:
C60
Sheet 12 of 84

02-MAR-2005 14:05
Use this drawing for AutoCAD Manual

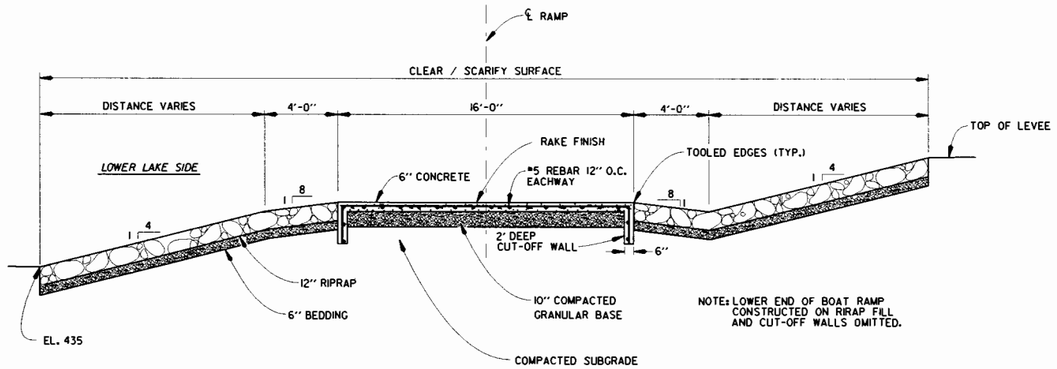

BOAT RAMP SECTION

NO SCALE

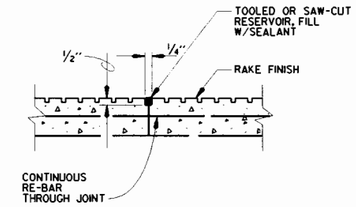

CONSTRUCTION JOINT (CJ)

NO SCALE

HORIZONTAL CONTROL POINT TIE OFFS
NOTE: ALL TIES ARE MAG NAIL IN TREE
• 5/8" REBAR - 48" LONG W/ WHZ CAP
(NOT TO SCALE)

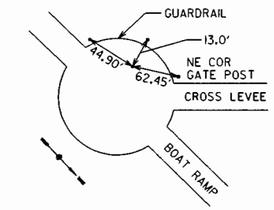

CONTROL POINT # 1204
E 552,740.56554 - N 1,351,120.67491

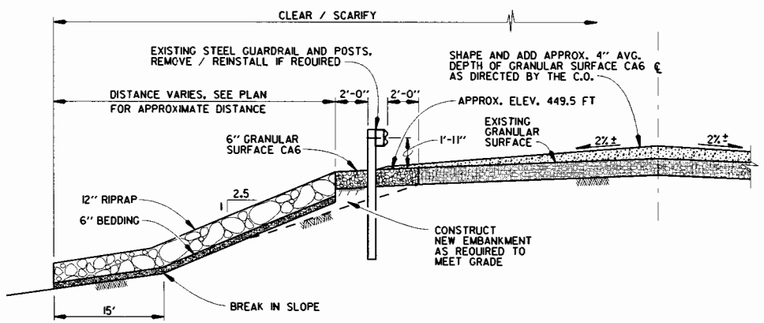

PARKING AREA REPAIR SECTION

NO SCALE

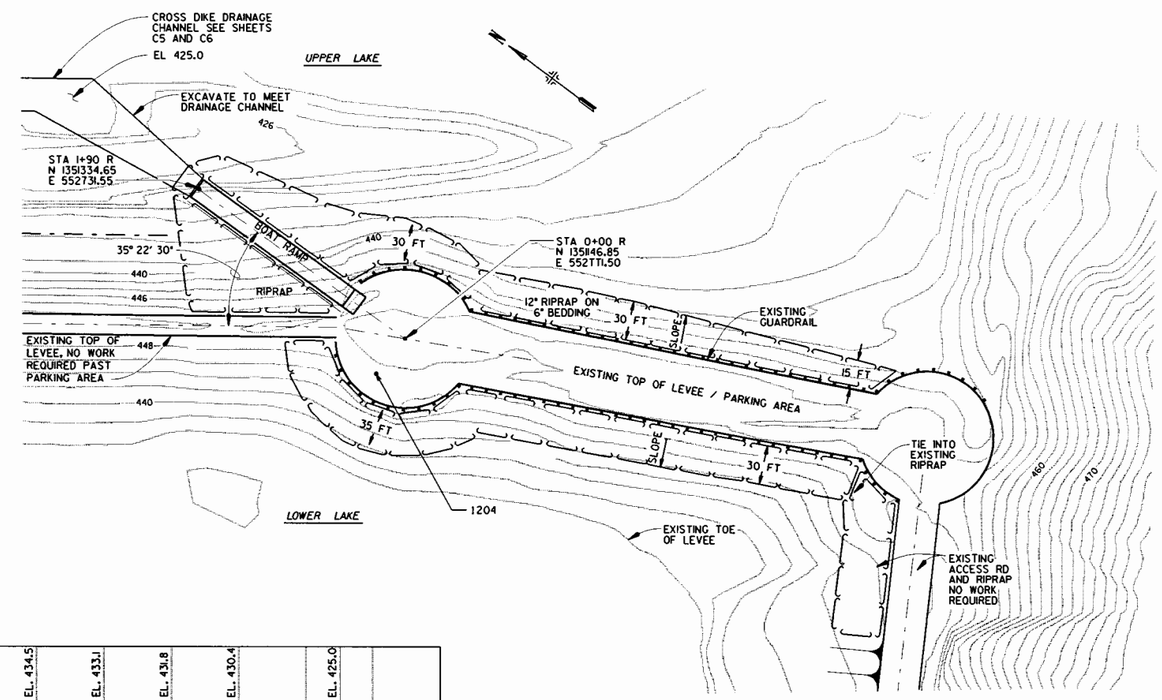

PARKING AREA REPAIR / BOAT RAMP - PLAN

100 50 0 100
SCALE IN FEET

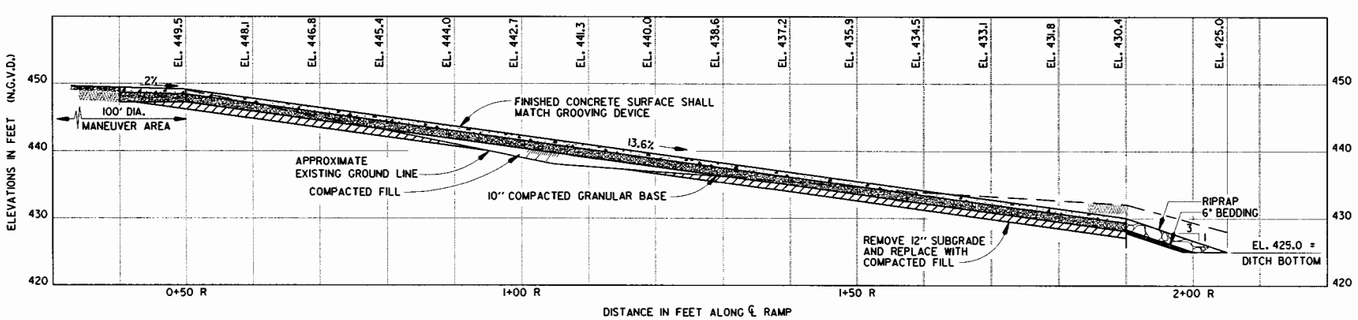

BOAT RAMP PROFILE

US Army Corps of Engineers
Rock Island District

Symbol	Description	Date	Approved
	AS CONSTRUCTED	26AUG04	DRC/RAL

Revisions

Designed By: DRC	Date: MAR 1999
Drawn By: BDJ - CAB	Scale: AS SHOWN
Checked By: ERK	Drawing Code: 1-L1-3-1/67
Reviewed By: JJC	Solicitation Number: DACW25-97-B-0032

U.S. ARMY ENGINEER DISTRICT
CORPS OF ENGINEERS
ROCK ISLAND, ILLINOIS

ILLINOIS WATERWAY
ENVIRONMENTAL MANAGEMENT PROGRAM
LA GRANGE POOL, MILE 124 TO 129.5
LAKE CHAUTAUQUA
OPERATIONS AND MAINTENANCE

BOAT RAMP PLAN AND DETAILS

Sheet Reference Number:
C70
Sheet 13 of 84

02-MAR-2005 12:41
$environ$$projects$$EPS240M Manual - Use this order$$sheet52$c070.dgn

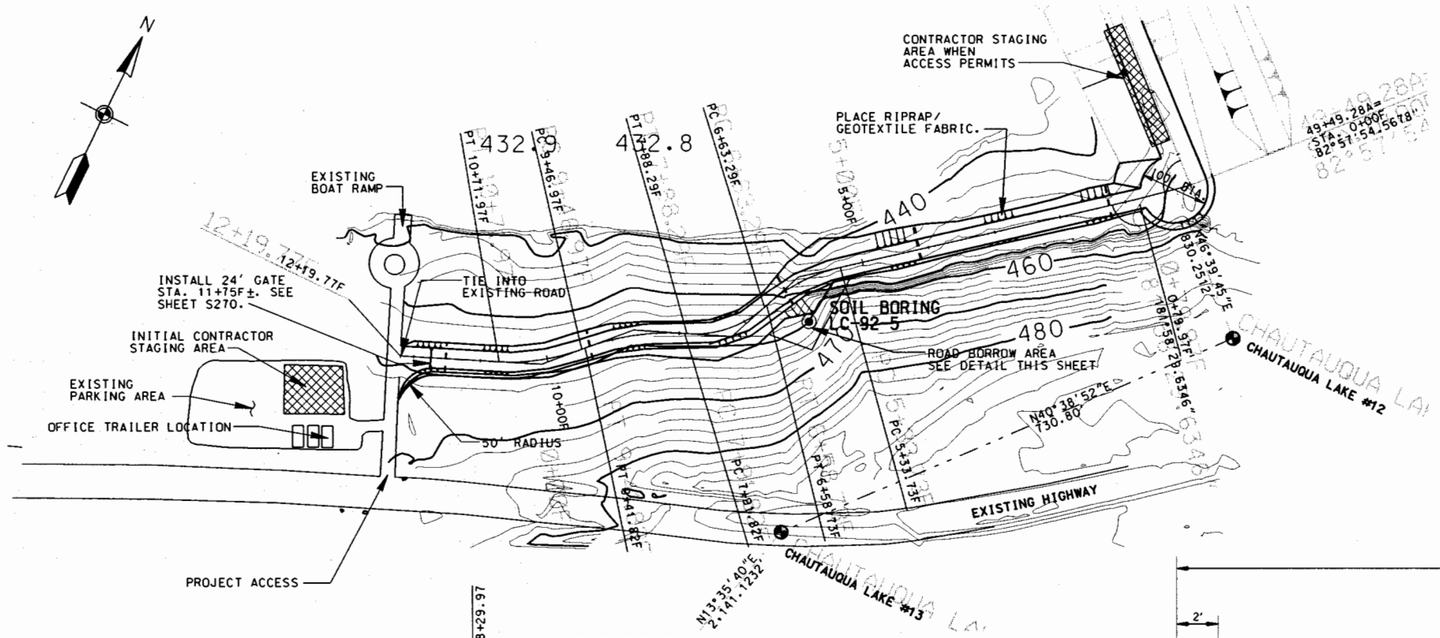

ACCESS ROAD PLAN

100 50 0 100 200FT
SCALE: 1"= 100'

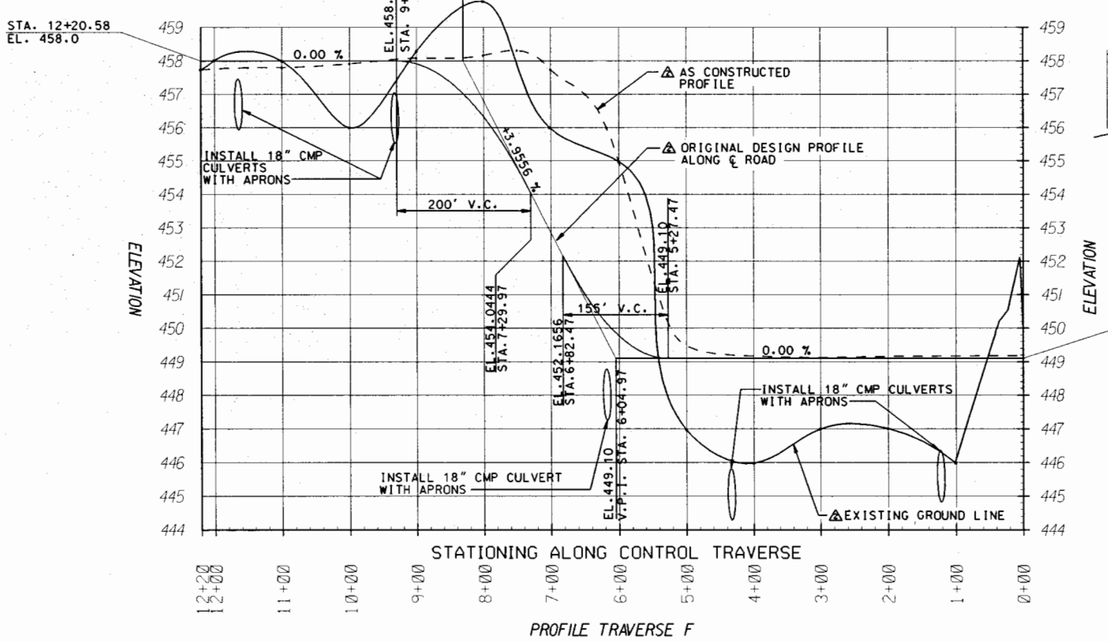

PROFILE TRAVERSE F

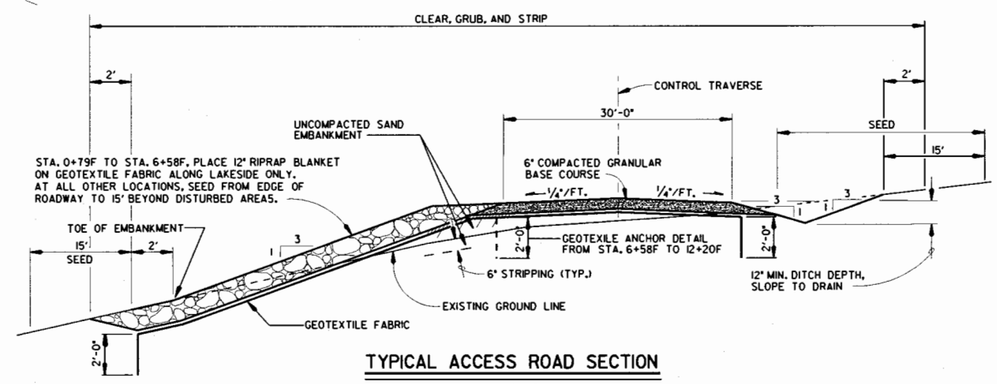

TYPICAL ACCESS ROAD SECTION

NO SCALE

P.I. STA. 5+97.5627F
Δ = 28°39'55"
D = 22°55'57"
R = 249.8488'
T = 63.8371
L = 125'
E = 8.03'
P.C. STA. 5+33.7256F
P.T. STA. 6+58.7256F

P.I. STA. 7+29.3146F
Δ = 45°37'18"
D = 36°29'51"
R = 156.99'
T = 66.03'
L = 125'
E = 13.32'
P.C. STA. 6+63.29F
P.T. STA. 7+88.29F

P.I. STA. 8+68.00F
Δ = 24°39'31"
D = 16°26'20"
R = 348.54'
T = 76.18'
L = 150'
E = 8.23'
P.C. STA. 7+91.82F
P.T. STA. 9+41.82F

P.I. STA. 10+10.30F
Δ = 24°00'45"
D = 19°12'36"
R = 298.26'
T = 63.43'
L = 125'
E = 6.67'
P.C. STA. 9+46.97F
P.T. STA. 10+71.97F

NOTES:

1. ROAD ALIGNMENT SHALL BE FIELD ADJUSTED. CONTRACTOR SHALL NOT BEGIN EARTHWORK UNTIL C.O.R. APPROVES LAYOUT.
2. CULVERT LOCATIONS WILL BE FIELD ADJUSTED.

HORIZONTAL TRAVERSE CONTROL POSITION
C. L. #12: 5/8" PIN WITH BRASS CAP
1,350,718.5968N 553,241.9318E
C. L. #13: 5/8" PIN WITH BRASS CAP
1,350,164.1155N 552,765.884OE

US Army Corps of Engineers Rock Island District

Symbol	Description	Date	Approved
4	REVISED AS CONSTRUCTED	17 DEC 98	DRC/JJC
3	MOD. #1 - REVISED CONTOURS	18 AUG 92	

Revisions

U.S. ARMY ENGINEER DISTRICT CORPS OF ENGINEERS ROCK ISLAND, ILLINOIS

Designed By: DRC | Date: MAR 1999
Drawn By: TPD/HDG | Scale: AS SHOWN
Checked By: DLL | Drawing Code: 1-L1-3-1/67
Reviewed By: DJH | Solicitation Number: DACW25-97-B-0032

ILLINOIS WATERWAY
ENVIRONMENTAL MANAGEMENT PROGRAM
LA GRANGE POOL - MILE 124 TO 129.5
LAKE CHAUTAUQUA
OPERATIONS AND MAINTENANCE

ACCESS ROAD PLAN AND SECTION STA. 0+00F TO STA. 12+19.77F

Sheet Reference Number:
C80
Sheet 14 of 84

02-MAR-2005 13:30
#mardis#c:\projects\EPS2\OM Manual - Use this one\c80.dgn

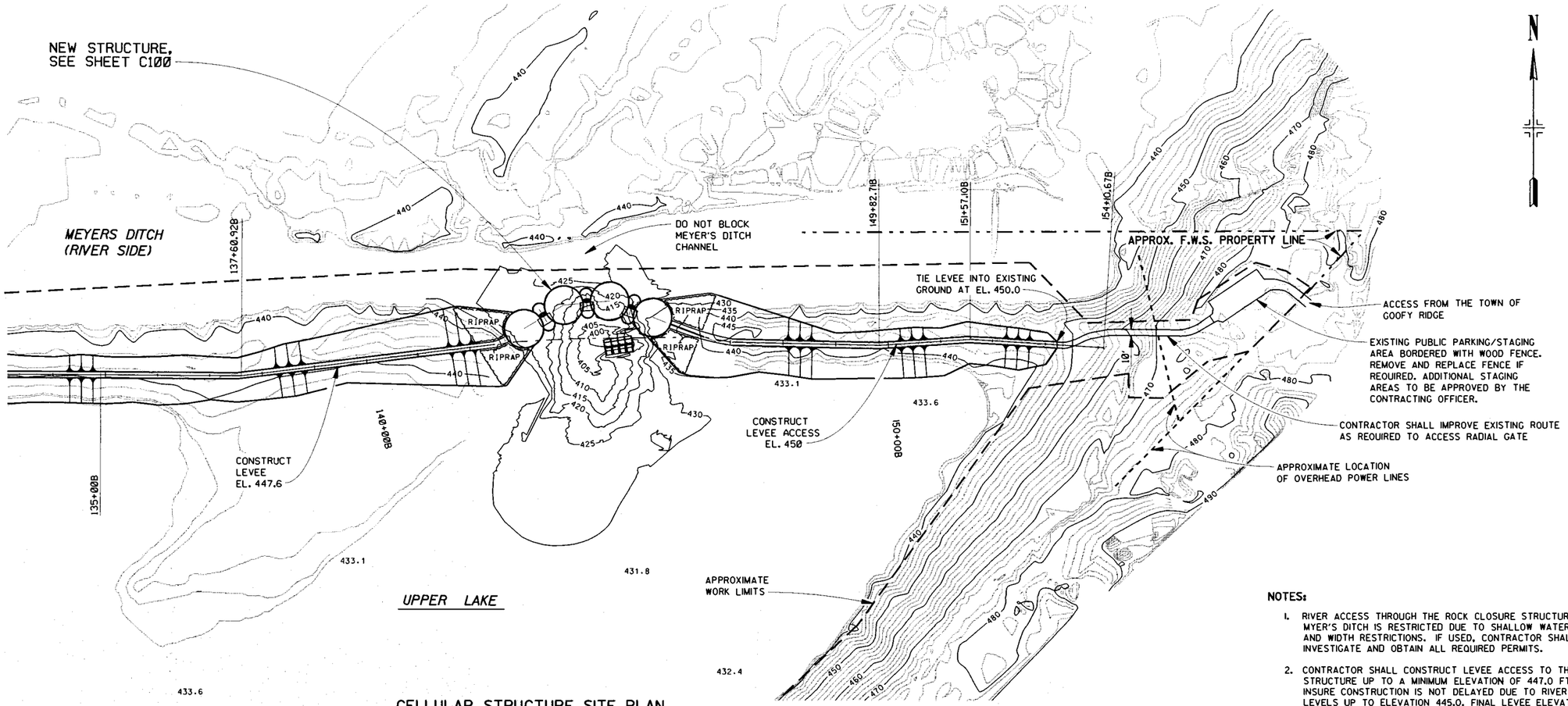

CELLULAR STRUCTURE SITE PLAN

100 0 100 200 300
SCALE IN FEET

NOTES:

1. RIVER ACCESS THROUGH THE ROCK CLOSURE STRUCTURE AND MYER'S DITCH IS RESTRICTED DUE TO SHALLOW WATER DEPTHS AND WIDTH RESTRICTIONS. IF USED, CONTRACTOR SHALL FULLY INVESTIGATE AND OBTAIN ALL REQUIRED PERMITS.
2. CONTRACTOR SHALL CONSTRUCT LEVEE ACCESS TO THE STRUCTURE UP TO A MINIMUM ELEVATION OF 447.0 FT. TO INSURE CONSTRUCTION IS NOT DELAYED DUE TO RIVER LEVELS UP TO ELEVATION 445.0. FINAL LEVEE ELEVATION IN THIS AREA IS 450.0 FT. SEE SHEET C40.
3. SHEET PILE IS GOVERNMENT FURNISHED USED PILING WHICH THE CONTRACTOR SHALL OBTAIN FROM ST. LOUIS DISTRICT. SEE SPECIFICATIONS. EXCESS PILING SHALL BE STACKED IN THE PARKING AREA AS SHOWN AND DIRECTED BY THE C.O.

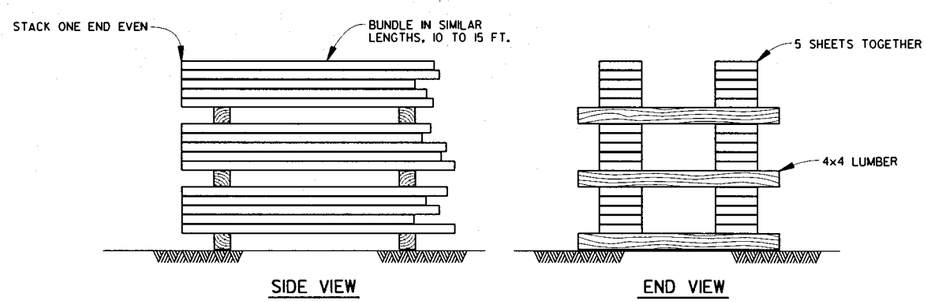

NOTE:

SHEET PILE WHICH IS DAMAGED OR LESS THAN 10 FT. LONG SHALL BE REMOVED OFF-SITE. PLACE STACKS IN LOCATIONS AS DIRECTED BY THE C.O.

EXCESS SHEET PILE STACKING DETAIL

NO SCALE

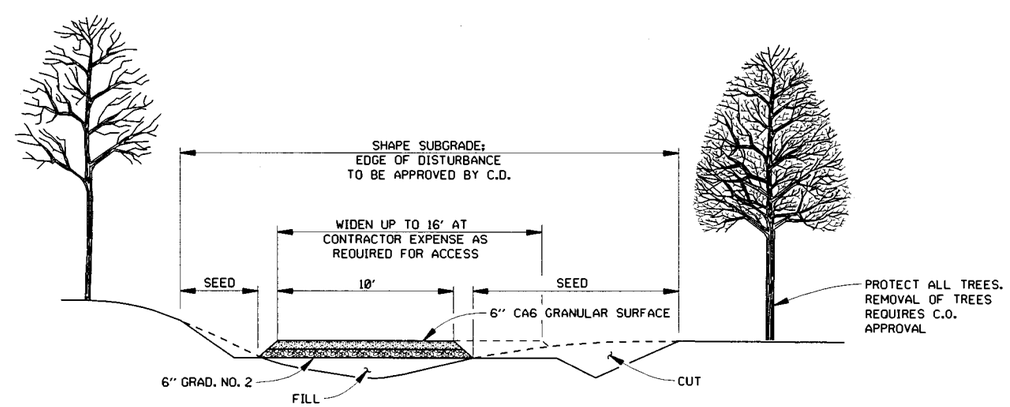

ACCESS ROAD TYPICAL SECTION

NO SCALE

US Army Corps of Engineers Rock Island District

Symbol	Description	Date	Approved
	Revisions		

Designed By: DRC
Date: MAR 1999
Drawn By: CAB - RLC
Scale: AS SHOWN
Checked By: ERK
Drawing Code: 1-L1-3-1/67
Reviewed By: JJC
Solicitation Number: DACW25-97-B-0032

U.S. ARMY ENGINEER DISTRICT
CORPS OF ENGINEERS
ROCK ISLAND, ILLINOIS

ILLINOIS WATERWAY
ENVIRONMENTAL MANAGEMENT PROGRAM
LA GRANGE POOL, MILE 124 TO 129.5
LAKE CHAUTAUQUA
OPERATIONS AND MAINTENANCE

CELLULAR STRUCTURE SITE PLAN

Sheet Reference Number:
C90
Sheet 15 of 84

02-MAR-2005 13:20
emmrdfs8c008$Projects$FS2$OGM Manual - Use this on$mes52c090.dgn

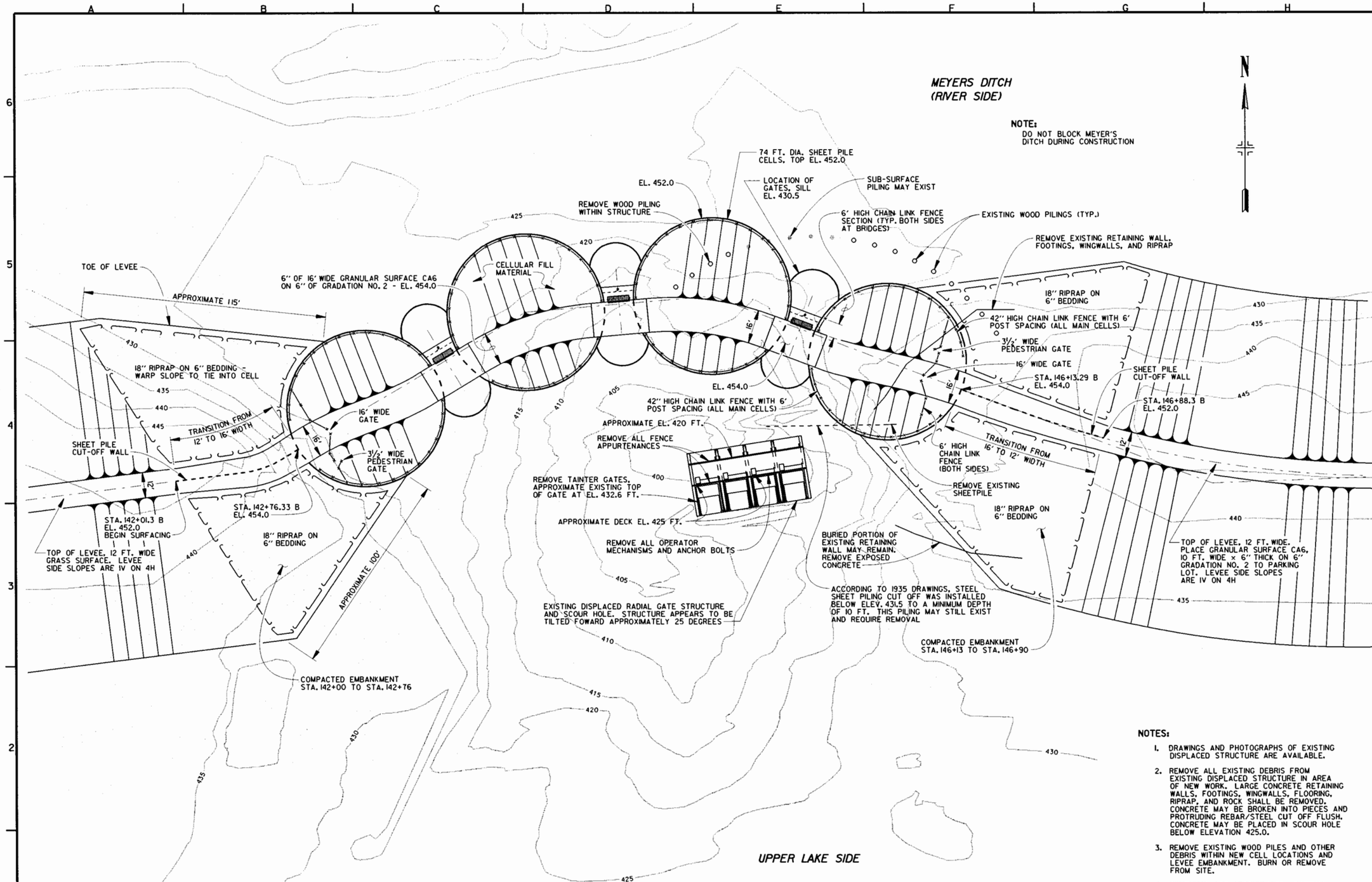

CELLULAR STRUCTURE LOCATION PLAN

10 0 20 40 60
SCALE IN FEET

NOTES:

1. DRAWINGS AND PHOTOGRAPHS OF EXISTING DISPLACED STRUCTURE ARE AVAILABLE.
2. REMOVE ALL EXISTING DEBRIS FROM EXISTING DISPLACED STRUCTURE IN AREA OF NEW WORK. LARGE CONCRETE RETAINING WALLS, FOOTINGS, WINGWALLS, FLOORING, RIPRAP, AND ROCK SHALL BE REMOVED. CONCRETE MAY BE BROKEN INTO PIECES AND PROTRUDING REBAR/STEEL CUT OFF FLUSH. CONCRETE MAY BE PLACED IN SCOUR HOLE BELOW ELEVATION 425.0.
3. REMOVE EXISTING WOOD PILES AND OTHER DEBRIS WITHIN NEW CELL LOCATIONS AND LEVEE EMBANKMENT. BURN OR REMOVE FROM SITE.
4. CONTOURS ARE APPROXIMATE. BOTTOM CONDITIONS MAY HAVE CHANGED SINCE SOUNDINGS WERE TAKEN IN JUNE 1996.
5. PLACE FENCE FABRIC ON LAKE SIDE OF FENCE POSTS.

US Army Corps of Engineers Rock Island District

Symbol	Description	Date	Approved
	Revisions		

Designed By: DRC
Drawn By: RLC - CAB
Checked By: ERK
Reviewed By: JJC
Date: MAR 1999
Scale: AS SHOWN
Drawing Code: 1-L1-3-1/67
Solicitation Number: DACW25-97-B-0032

U.S. ARMY ENGINEER DISTRICT CORPS OF ENGINEERS ROCK ISLAND, ILLINOIS

ILLINOIS WATERWAY
ENVIRONMENTAL MANAGEMENT PROGRAM
LA GRANGE POOL - MILE 124 TO 129.5
LAKE CHAUTAUQUA
OPERATIONS AND MAINTENANCE

CELLULAR STRUCTURE LOCATION PLAN

Sheet Reference Number:
C100
Sheet 16 of 84

02-MAR-2005 13:21

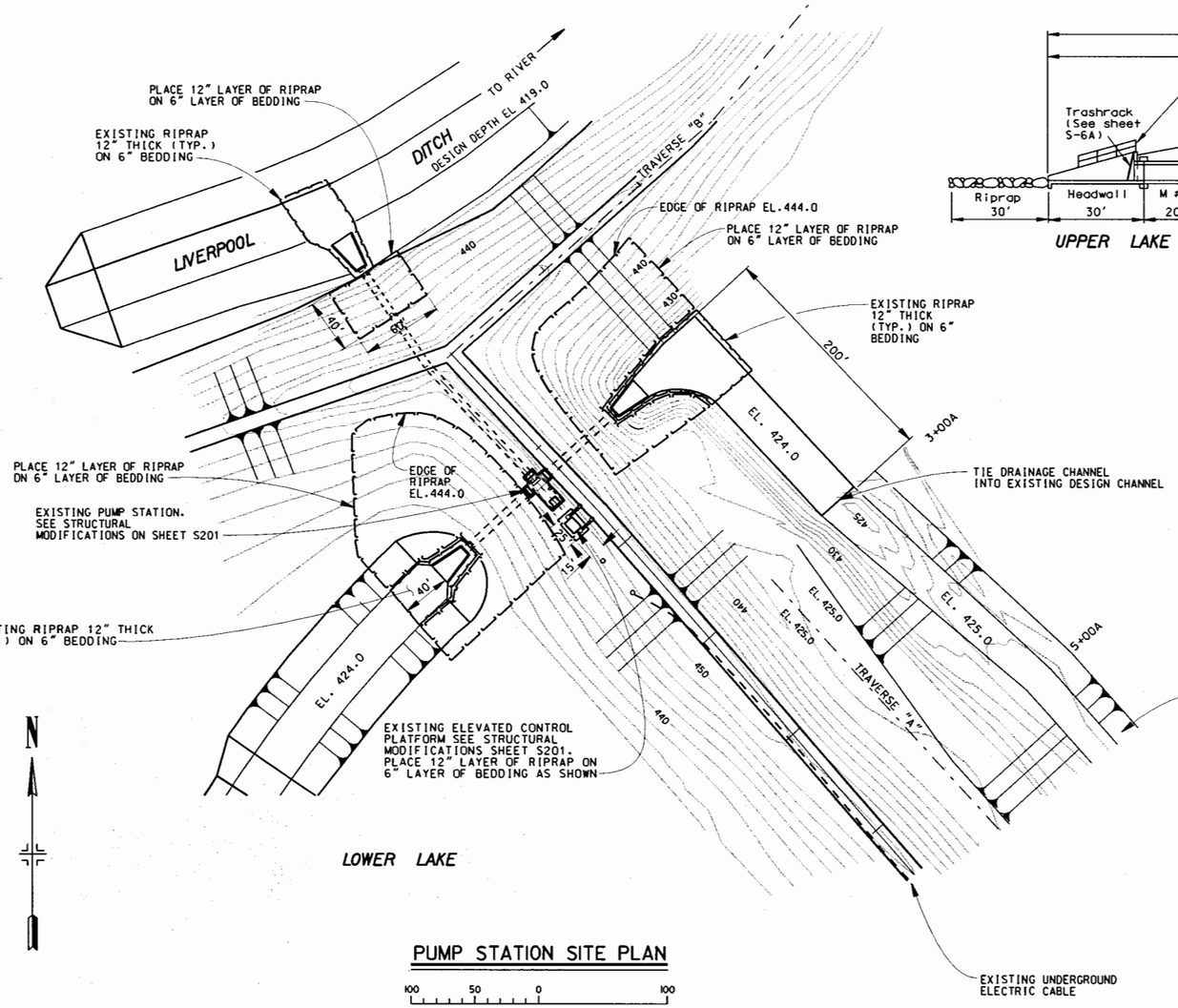

PUMP STATION SITE PLAN

100 50 0 100
SCALE IN FEET

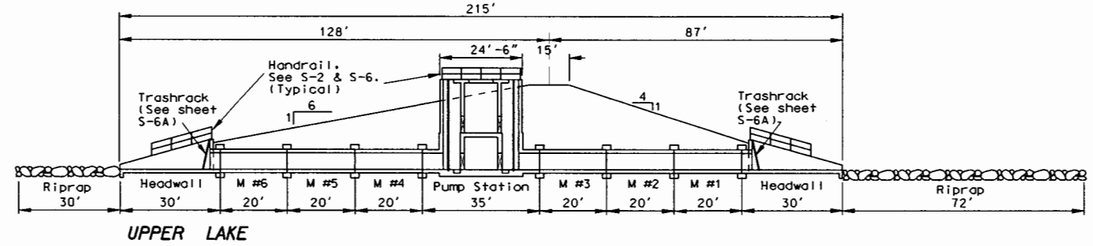

SECTION A

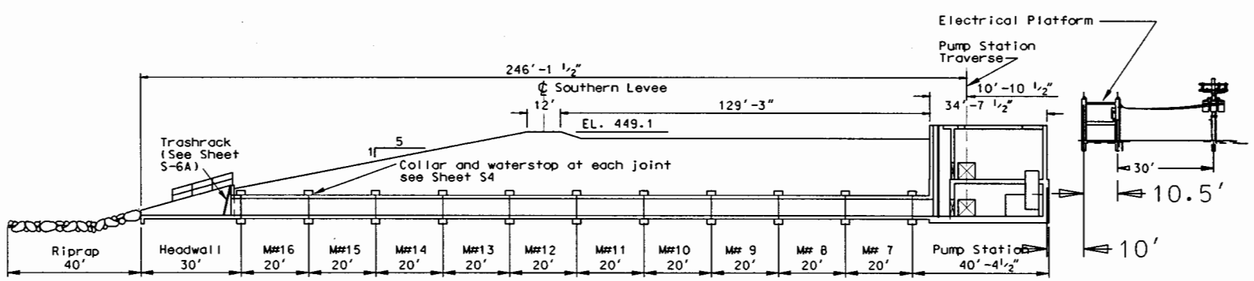

SECTION B

NOTES:

1. CONTRACTOR SHALL PRELOAD PUMP STATION SITE FOR 6 MONTHS WITH UNCOMPACTED EMBANKMENT. DEPTH OF PRE-LOAD SHALL BE 4' ABOVE FINAL GRADE.
2. CONTRACTOR SHALL BACKFILL WITH COMPACTED CLAY EMBANKMENT UP TO FINAL GRADE WITHIN LIMITS OF PRELOAD BOUNDARY.
3. CONTRACTOR SHALL BUILD PUMP STATION AS SOON AS ACCESS PERMITS AND PRELOAD IS COMPLETE.
4. ⚠ CONTOURS NOT SHOWN IN UPPER AND LOWER LAKE. LIVERPOOL DITCH. AND MEYERS DITCH.
5. ⚠ CONTOUR INTERVAL IS 2 FEET.
6. LEVEE FROM STA 0+00A TO 5+00A AND STATION 0+00B TO 3+00B SHALL REQUIRE FINAL DRESSING. SHAPING AND SEEDING. AREAS TO RECEIVE RIPRAP SHALL BE SHAPED.
7. THE C.O. MAY FIELD ADJUST RIPRAP AREA DIMENSIONS AND / OR QUANTITY TO MAXIMIZE RIPRAP EFFECTIVENESS.
8. PUMP STATION CONSISTS OF A 41,000 GPM. 250HP SUBMERSIBLE ELECTRIC PUMP. THE SUMP FLOOR IS AT ELEVATION 424.0. WHEN COMPLETED. THE PUMP IS CAPABLE OF LOWERING WATER ELEVATION TO 430.0 FT IN THE SUMP AREA. THE PUMP MAY ONLY BE USED ONE TIME FOR INITIAL DEWATERING. THERE WILL STILL BE WATER IN THE BORROW/DRAINAGE DITCHES AND SUMP. SEE SPECIFICATIONS FOR DEWATERING REQUIREMENTS. THE PUMP WILL NOT BE AVAILABLE UNTIL 1 JULY 1998.
9. PRELOAD PUMP STATION AND CULVERT AREA 6 MONTHS PRIOR TO EXCAVATION AND CONSTRUCTION.

US Army Corps of Engineers Rock Island District

Symbol	Description	Date	Approved
	Revisions		

Designed By: DRC
Drawn By: CAB
Checked By: ERK
Reviewed By: JJC
Date: MAR 1999
Scale: AS SHOWN
Drawing Code: 1-L1-3-1/67
Solicitation Number: DACW25-97-B-0032

U.S. ARMY ENGINEER DISTRICT CORPS OF ENGINEERS ROCK ISLAND, ILLINOIS

ILLINOIS WATERWAY
ENVIRONMENTAL MANAGEMENT PROGRAM
LA GRANGE POOL, MILE 124 TO 129.5
LAKE CHAUTAUQUA
OPERATIONS AND MAINTENANCE

PUMP STATION SITE PLAN

Sheet Reference Number:
C110
Sheet 17 of 84

02-MAR-2005 13:21
mmrdfs&c0d8p0j&cs1&CP52-ROM Manual - Use this onlmap52c110.dgn

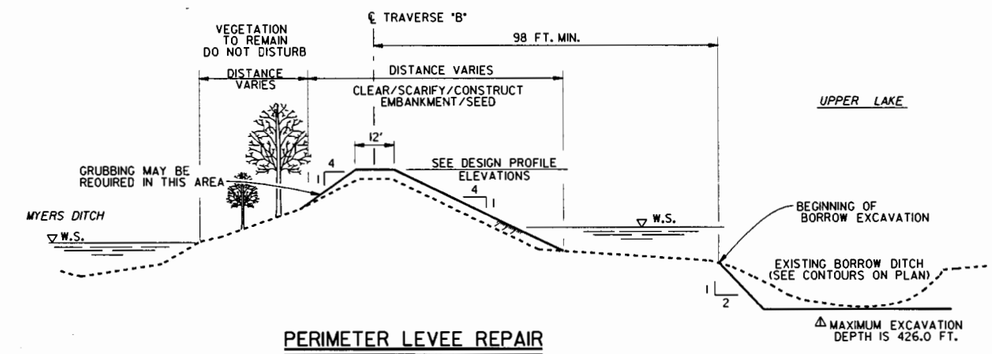

PERIMETER LEVEE REPAIR

STA 55+00B TO STA 89+00B

NO SCALE

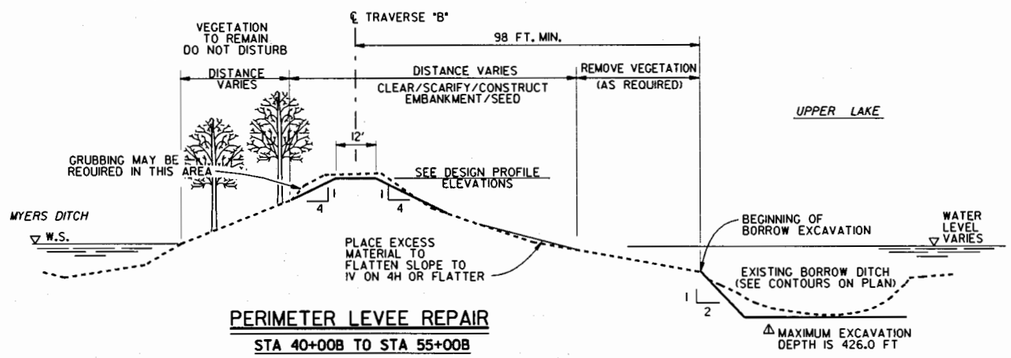

PERIMETER LEVEE REPAIR

STA 40+00B TO STA 55+00B

NO SCALE

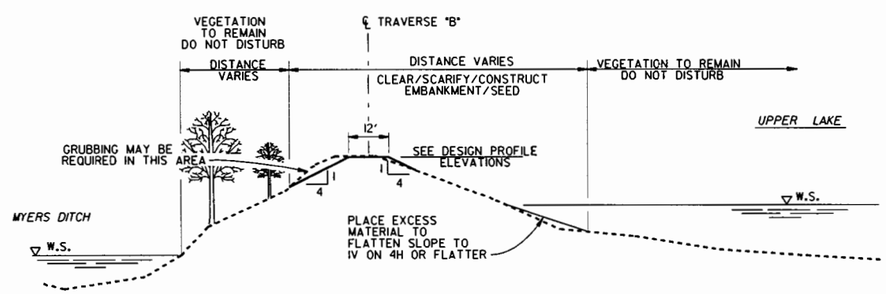

PERIMETER LEVEE REPAIR

STA. 3+00B TO STA. 40+00B

NO SCALE

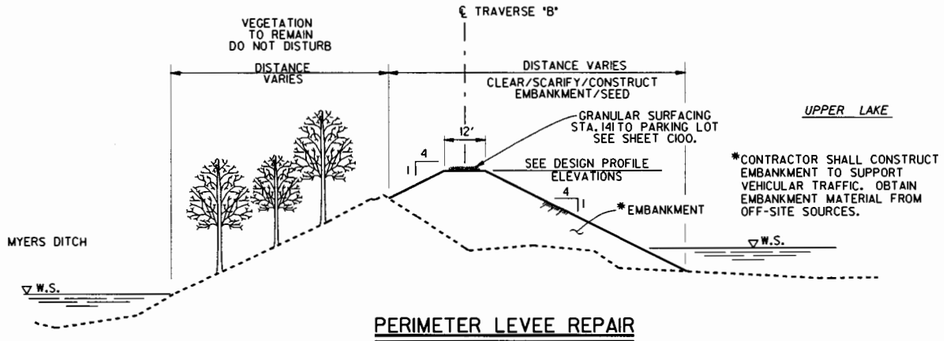

PERIMETER LEVEE REPAIR

STA 141+75B TO STA 142+01 AND STA 146+88 TO STA 154+00B

NOTE: LEVEE TIES INTO CELLULAR STRUCTURE. SEE SHEET C90.

NO SCALE

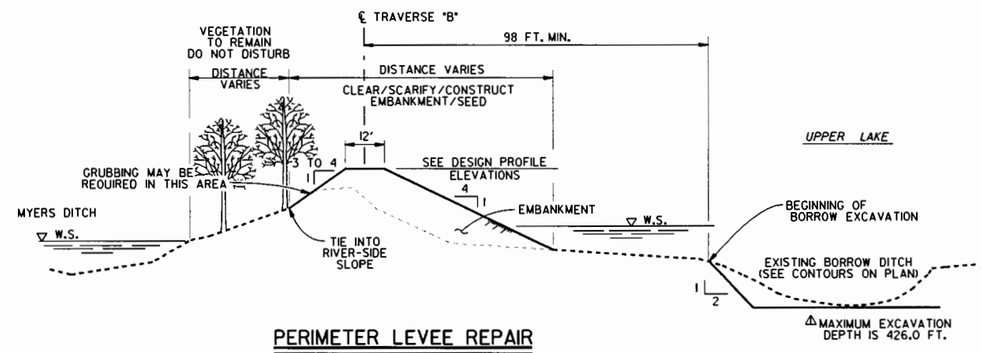

PERIMETER LEVEE REPAIR

STA 89+00B TO STA 141+75B

NO SCALE

LEGEND

DESIGN TEMPLATE

EXISTING GROUND (VARIES ALONG LEVEE)

NOTES:

1. NO BORROW ADJACENT TO LEVEE FROM STA. 0+00B TO STA. 40+00B AND STA. 141+75B TO STA. 154+00B.
2. ORIGINAL LEVEE HAS GENERALLY BEEN CLEARED AND GRUBBED. HOWEVER, SOME GRUBBING WILL BE REQUIRED. LEVEE SHALL BE CLEARED OF ALL DEBRIS AND SCARIFIED PRIOR TO ADDITIONAL EARTHWORK, FINAL SHAPING, AND SEEDING.
3. EXCESS EXISTING MATERIAL ON LEVEE SHALL NOT BE MOVED MORE THAN 3 STATIONS ALONG LEVEE. EXCESS LEVEE MATERIAL SHALL BE USED ALONG UPPER LAKE SIDE OF LEVEE TO FLATTEN SLOPE.
4. CONTRACTOR SHALL CONSTRUCT LEVEE BREACH AND REPAIR WITH MATERIAL FROM OFF-SITE SOURCES AS DESCRIBED IN THE SPECIFICATIONS.
5. SEE REFERENCE DRAWING CROSS SECTIONS.
6. DEWATER UPPER LAKE TO CONSTRUCT LEVEE EMBANKMENT. SEE SPECIFICATIONS.

US Army Corps of Engineers
Rock Island District

Symbol	Description	Date	Approved
1	AMD. #1 - CHANGED BORROW DITCH AND NOTES 1 AND 4.	8/26/97	ERK-JJC

Revisions

Designed By: DRC
Drawn By: BDJ-CAB
Checked By: ERK
Reviewed By: JJC
Date: MAR 1999
Scale: AS SHOWN
Drawing Code: 1-L1-3-1/67
Solicitation Number: DACW25-97-B-0032

U.S. ARMY ENGINEER DISTRICT
CORPS OF ENGINEERS
ROCK ISLAND, ILLINOIS

ILLINOIS WATERWAY
ENVIRONMENTAL MANAGEMENT PROGRAM
LA GRANGE POOL - MILE 124 TO 129.5
LAKE CHAUTAUQUA
OPERATIONS AND MAINTENANCE

TYPICAL CROSS SECTIONS

Sheet Reference Number:
C120
Sheet 18 of 84

02-MAR-2005 13:22

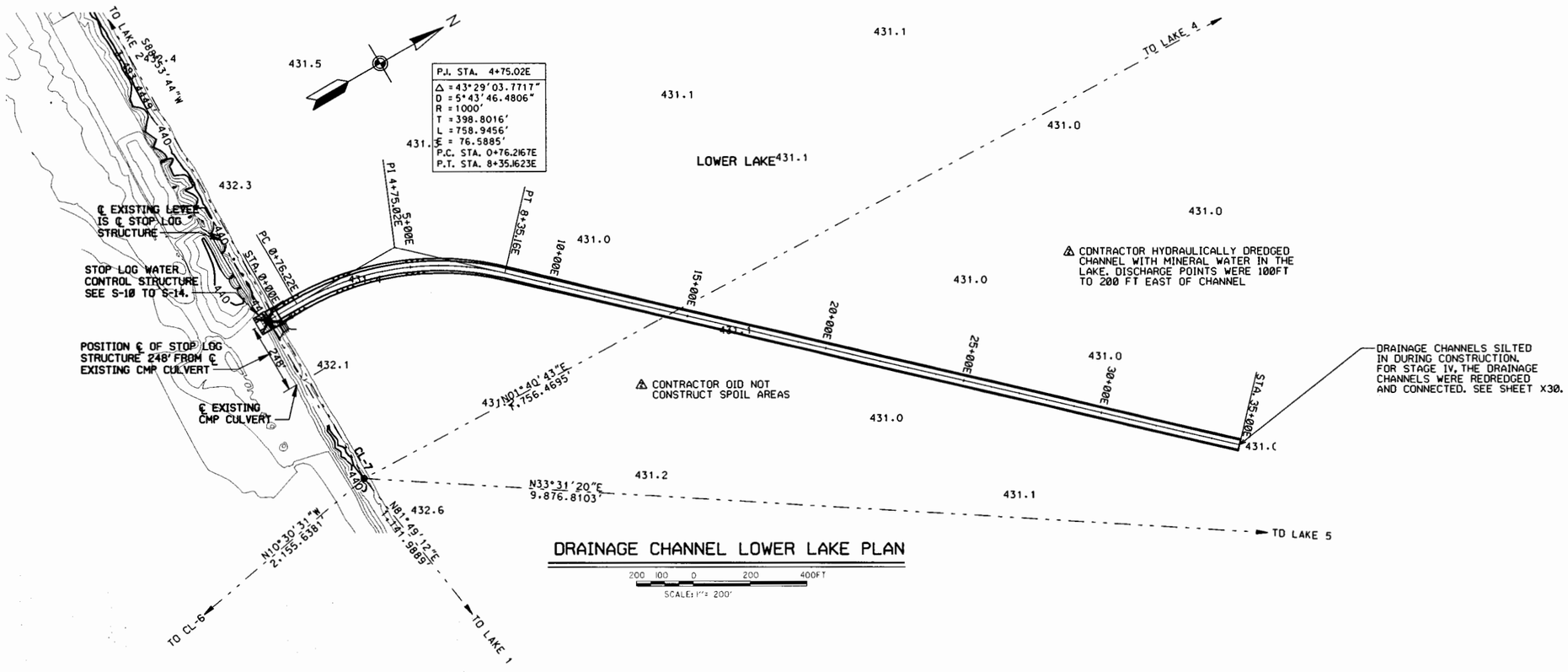

DRAINAGE CHANNEL LOWER LAKE PLAN

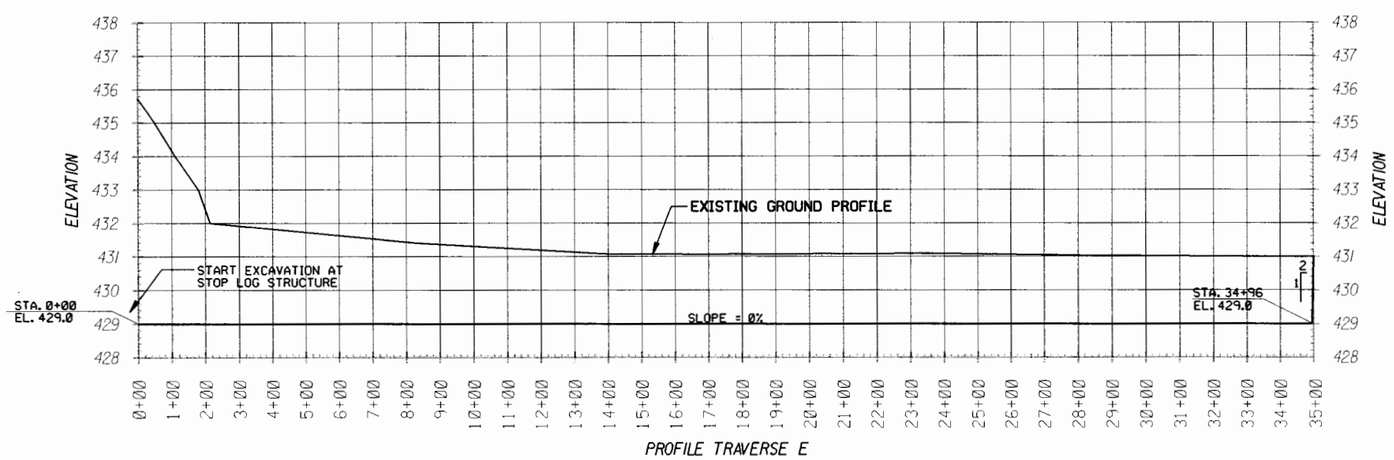

TBM #1 CHISELED "□" WEST END, NORTH ABUTMENT, BRIDGE AT ILLINOIS NATURAL HISTORY SURVEY
EL. 448.78

HORIZONTAL TRAVERSE CONTROL POSITION
CL-7: TRAVERSE POINT
1,342,562.4801N 537,374.6923E

US Army Corps of Engineers
Rock Island District

Symbol	Description	Date	Approved
1	REVISED AS CONSTRUCTED	17 DEC 98	DRC/JJC
2	AMD. 1 REVISED CONTOURS	18 AUG 99	

Revisions

Designed By: DRC
Date: MAR 1999
Drawn By:
Scale: AS SHOWN
Checked By:
Drawing Code: 1-L1-3-1/67
Reviewed By: JJC
Solicitation Number: DACW25-97-B-0032

U.S. ARMY ENGINEER DISTRICT
CORPS OF ENGINEERS
ROCK ISLAND, ILLINOIS

ILLINOIS WATERWAY
ENVIRONMENTAL MANAGEMENT PROGRAM
LA GRANGE POOL, MILE 124 TO 129.5
LAKE CHAUTAUQUA
OPERATIONS AND MAINTENANCE
LOWER LAKE
DEWATERING CHANNEL
PLAN AND DETAILS
STA 0+00 TO 35+00

Sheet Reference Number:
C130
Sheet 19 of 84

02-MAR-2005 13:23
memorydrive:odd:Projects:EPS2:MCM Manual - Use this onlmap52c130.dgn

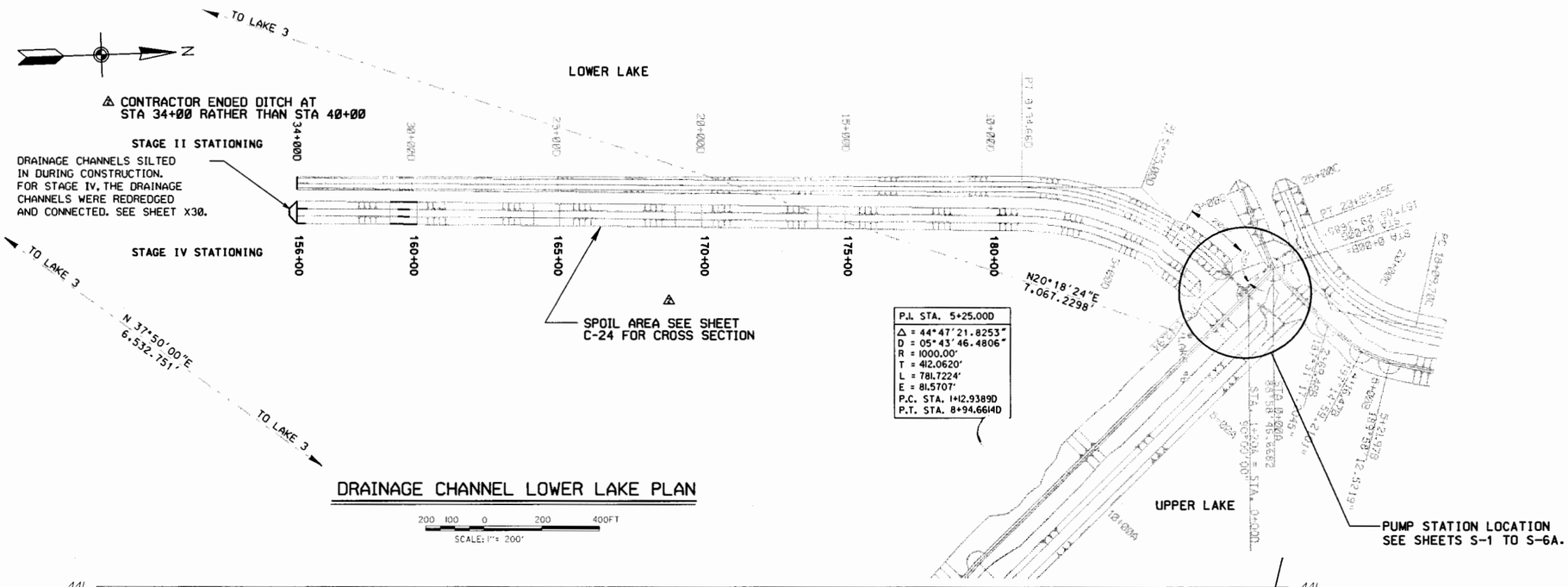

DRAINAGE CHANNEL LOWER LAKE PLAN

200 100 0 200 400FT

SCALE: 1"= 200'

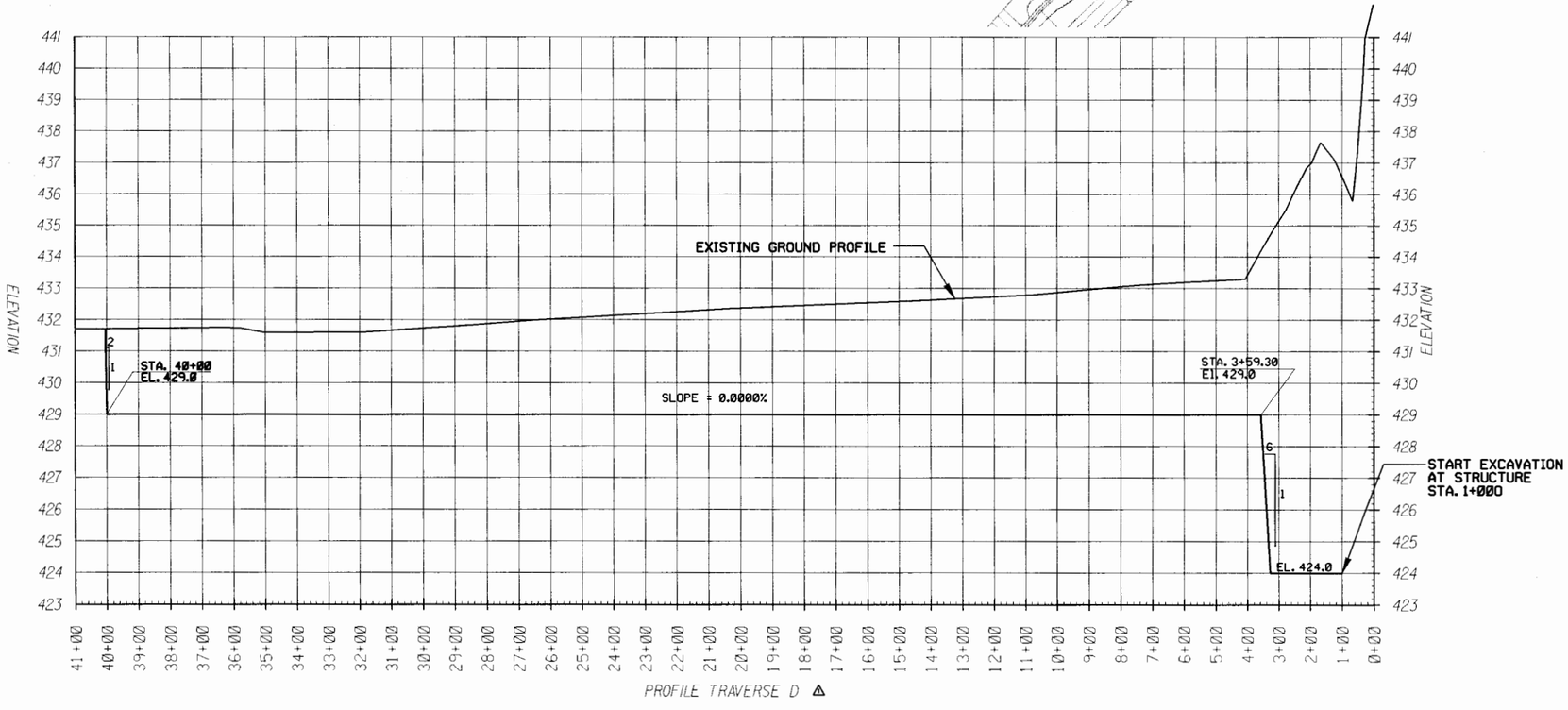

NOTES:

1. CONTRACTOR WILL ONLY EXCAVATE ONE DRAINAGE CHANNEL AT A TIME IN ORDER TO LIMIT DISRUPTION TO WILDLIFE.

HORIZONTAL TRAVERSE CONTROL POSITION
LAKE #6: ⅝" PIN WITH BRASS CAP
STA. 3+63.46513A 41.52654' RIGHT

US Army Corps of Engineers
Rock Island District

Symbol	Description	Date	Approved
Δ	REVISED AS CONSTRUCTED	17 DEC 98	DRC/JJD
Δ	AMD. #1 - REVISED CONTOURS AND PROFILE	18 AUG 92	

Revisions

Designed By:
Drawn By:
Checked By:
Reviewed By:
Date: MAR 1999
Scale: AS SHOWN
Drawing Code: 1-L1-3-1/67
Solicitation Number: DACW25-97-B-0032

U.S. ARMY ENGINEER DISTRICT
CORPS OF ENGINEERS
ROCK ISLAND, ILLINOIS

ILLINOIS WATERWAY
ENVIRONMENTAL MANAGEMENT PROGRAM
LA GRANGE POOL, MILE 124 TO 129.5
LAKE CHAUTAUQUA
OPERATIONS AND MAINTENANCE
LOWER LAKE DEWATERING CHANNEL PLAN & DETAILS STA 154+00 TO 189+00

Sheet Reference Number:
C140
Sheet 20 of 84

02-MAR-2005 13:23
e:\mvr\dfs\ecodrp\projects\EP52\DGN Manual - Use this on\ep52c140.dgn

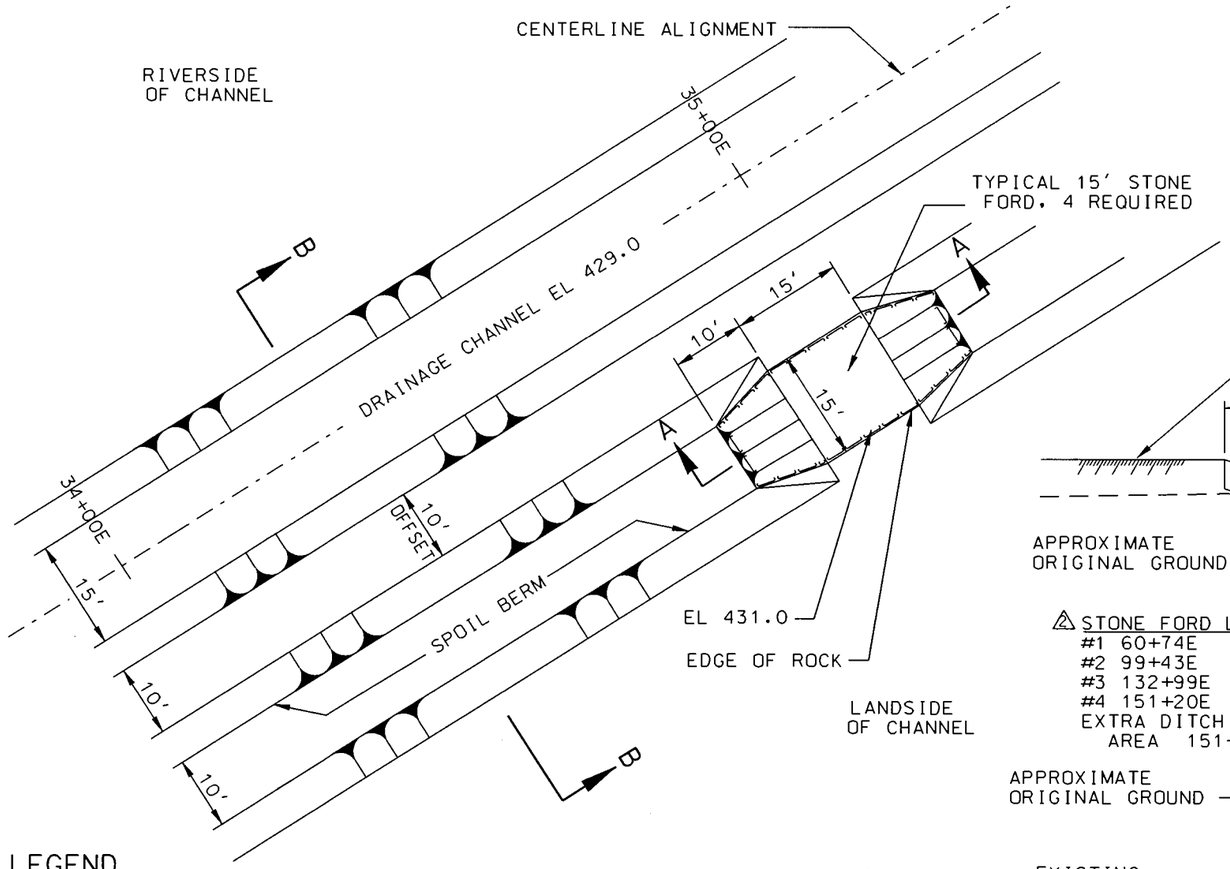

TYPICAL PLAN

10 0 10 20
SCALE IN FEET

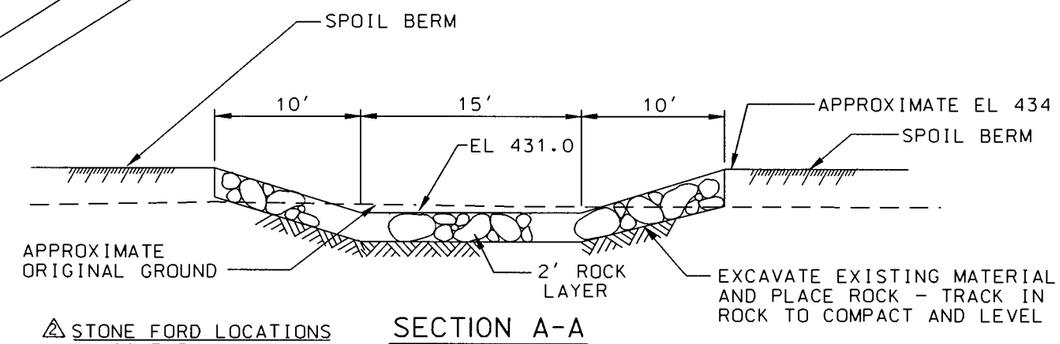

SECTION A-A

NO SCALE

STONE FORD LOCATIONS
#1 60+74E
#2 99+43E
#3 132+99E
#4 151+20E
EXTRA DITCH TO LOW AREA 151+20E

NOTE: LOCATE AND CONSTRUCT THE 4 TYPICAL STONE FORDS AT STATIONS: 35+00E, 72+00E, 102+00E, AND 145+00E.

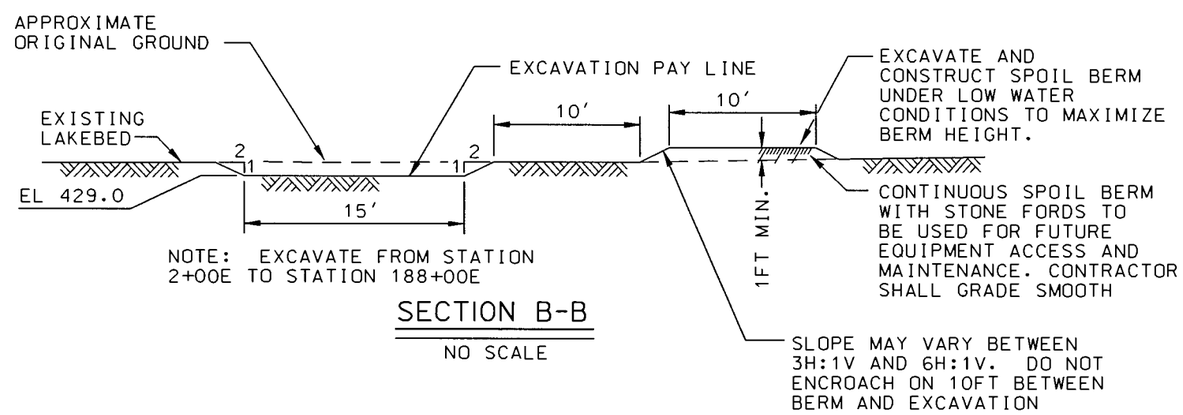

NOTE: EXCAVATE FROM STATION 2+00E TO STATION 188+00E

SECTION B-B

NO SCALE

LEGEND

- SLOPE SYMBOL
- RIPRAP SYMBOL
- EXISTING MATERIAL/LAKEBED
- SPOIL BERM CONSTRUCTION

ALIGNMENT DATA

PI	STATION	NORTHING	EASTING	CURVE #
BOP	0+00.00E	1342622.56	536752.05	
1	2+01.54E	1342823.55	536767.02	N/A
2	5+27.60E	1343145.27	536820.04	2
3	18+58.75E	1344093.92	537784.60	3
4	32+65.29E	1345250.23	538586.37	4
5	48+14.21E	1346289.09	539736.62	5
6	78+18.24E	1347805.21	542339.34	6
7	104+18.24E	1348670.25	544784.03	7
8	129+52.07E	1349181.83	547265.89	8
9	150+97.86E	1350156.33	549179.44	9
10	162+03.93E	1351416.52	549092.44	N/A
11	185+01.22E	1353708.50	549195.28	11
12	187+45.37E	1353927.21	549328.14	N/A
EOP	191+59.75E	1354302.45	549501.57	

GENERAL NOTES:

1. CONTRACTOR SHALL BEGIN EXCAVATION AND SPOIL BERM CONSTRUCTION AT APPROXIMATE STATION 2+00E AND WORK TO STATION 188+00E. THE LAKE WILL GRAVITY DRAIN THROUGH THE STOP LOG STRUCTURE AT STA. 0+00E WHEN THE RIVER IS LOWER THAN THE LAKE. SEE HYDROGRAPHS IN THE SPECIFICATIONS.
2. MINOR ALIGNMENT CHANGES MAY BE REQUIRED TO TIE INTO EXISTING DRAINAGE CHANNELS AT UPPER END AND LOWER END OF THE LAKE AND TO FOLLOW THE DEEPEST PARTS OF THE LAKE. ANY ALIGNMENT CHANGES SHALL BE COORDINATED THROUGH THE CONTRACTING OFFICER.
3. ALL CURVES HAVE A RADIUS OF 1,000 FT. CURVE DATA IS AVAILABLE. SEE SPECIFICATIONS

US Army Corps of Engineers Rock Island District

Symbol	Description	Date	Approved
4	AS BUILT	17 MAR 04	MRP
3	AND, #1 - SHEET NUMBER CHANGE ONLY	25 JUN 01	DRC/RAL

Revisions

Designed By: DRC
Date: APR 2001
Drawn By: DMP
Scale: AS SHOWN
Checked By: KNM
Project Code: 1-L1-3-1/67
Reviewed By: JJC
Solicitation Number: DACW25-01-B-0012

U.S. ARMY ENGINEER DISTRICT CORPS OF ENGINEERS ROCK ISLAND, ILLINOIS

ILLINOIS WATERWAY PROGRAM
ENVIRONMENTAL MANAGEMENT PROGRAM
LA GRANGE POOL, MILES 120.0 TO 129.5
LAKE CHAUTAUQUA
OPERATIONS AND MAINTENANCE
LOWER LAKE DEWATERING CHANNEL TYPICAL PLAN AND SECTIONS

Sheet Reference Number: **C150**
Sheet 21 of 84

02-MAR-2005 13:25
wmvrdfs#cadd#projects#EP52#OGM Manual - Use this one#ep52c150.dgn

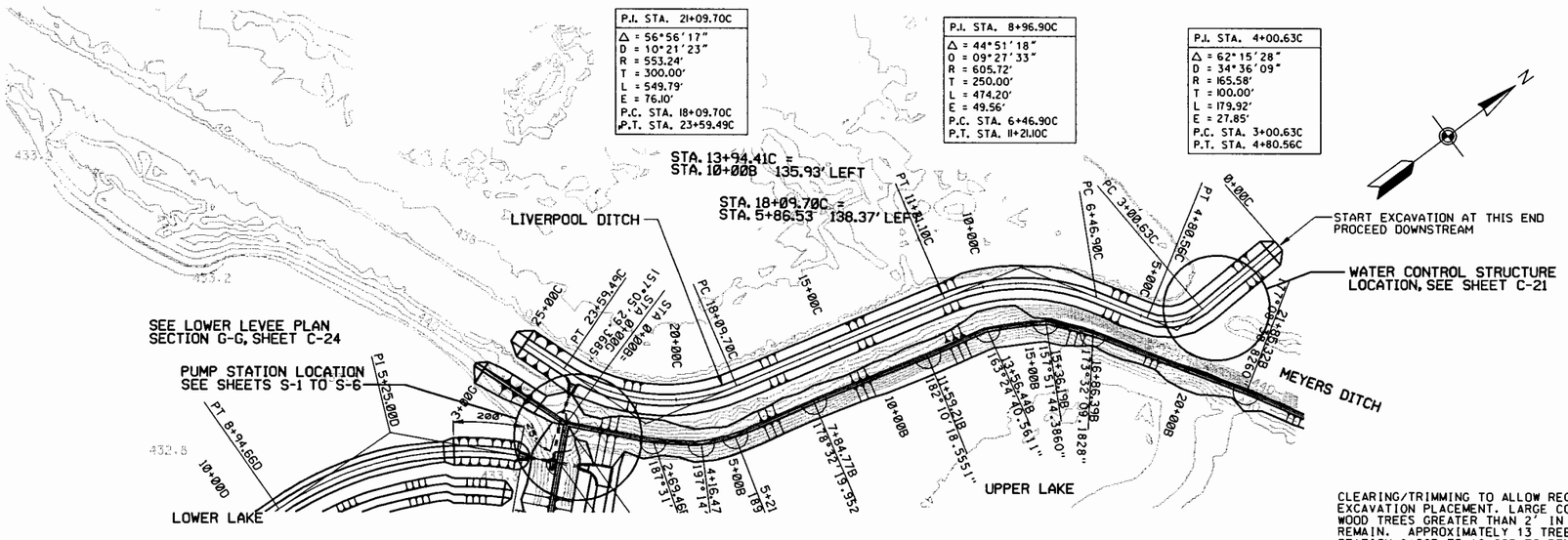

LIVERPOOL DITCH EXCAVATION PLAN

200 100 0 200 400FT
SCALE: 1"= 200'

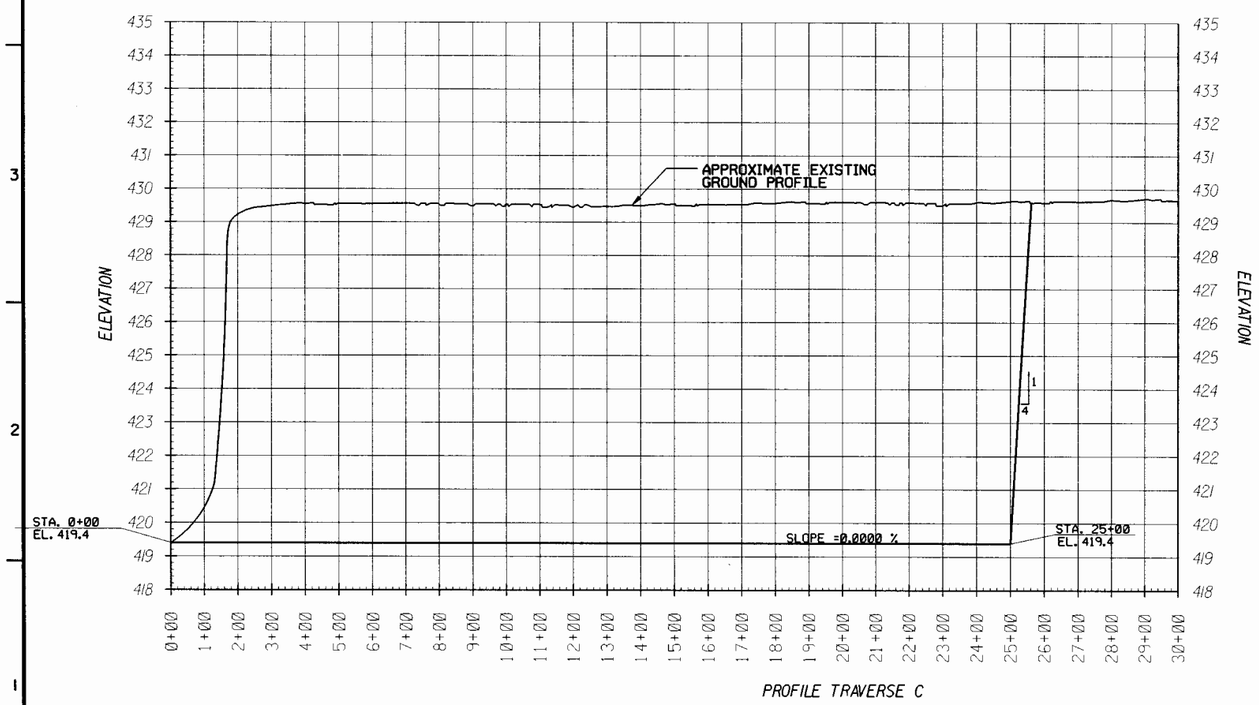

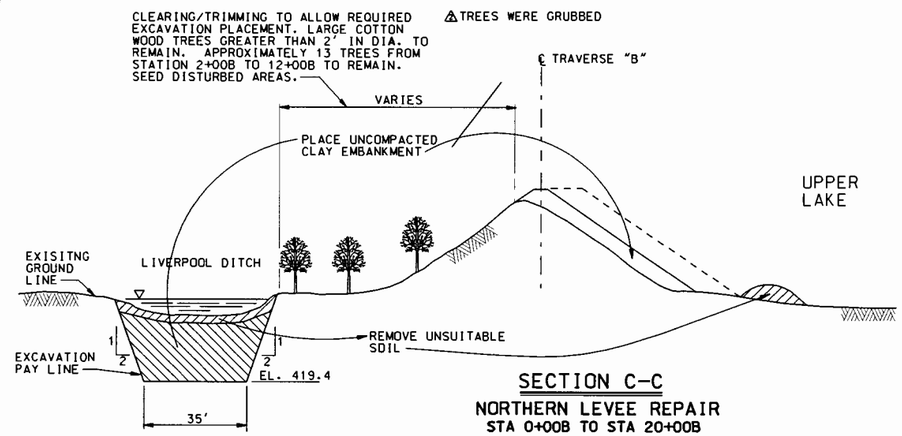

SECTION C-C
NORTHERN LEVEE REPAIR
STA 0+00B TO STA 20+00B

NOTES:

1. CONTRACTOR SHALL EXERCISE CAUTION SO AS NOT TO DAMAGE IDENTIFIED TREES FROM STATION 2+00B TO 12+00B. SEE SHEET C-23. CONTRACTOR GRUBBED ALL TREES ON RIVER SIDE OF LEVEE
2. CONTRACTOR SHALL MAINTAIN EXCAVATION OPERATIONS WITHIN EOGE OF DISTURBANCE TO MINIMIZE DAMAGE TO HABITAT AREAS.

US Army Corps of Engineers Rock Island District

Symbol	Description	Date	Approved
2	REVISED AS CONSTRUCTED	17 DEC 98	DRC/JJC
1	AMD. #1 - REVISED CONTOURS	18 AUG 92	

Revisions

Designed By: DRC
Date: MAR 1999
Drawn By:
Scale: AS SHOWN
Checked By:
Drawing Code: 1-L1-3-1/67
Reviewed By: JJC
Solicitation Number: DACW25-97-B-0032

U.S. ARMY ENGINEER DISTRICT CORPS OF ENGINEERS ROCK ISLAND, ILLINOIS

ILLINOIS WATERWAY
ENVIRONMENTAL MANAGEMENT PROGRAM
LA GRANGE POOL, MILE 124 TO 129.5
LAKE CHAUTAUQUA
OPERATIONS AND MAINTENANCE

LIVERPOOL DITCH EXCAVATION PLAN - UPPER STA. 0+00C TO STA. 25+00C

Sheet Reference Number:
C160
Sheet 22 of 84

02-MAR-2005 13:25
ewmurdfs#acad#ro0jects#EPS2#OM Manual - Use this onlsep52c160.dgn

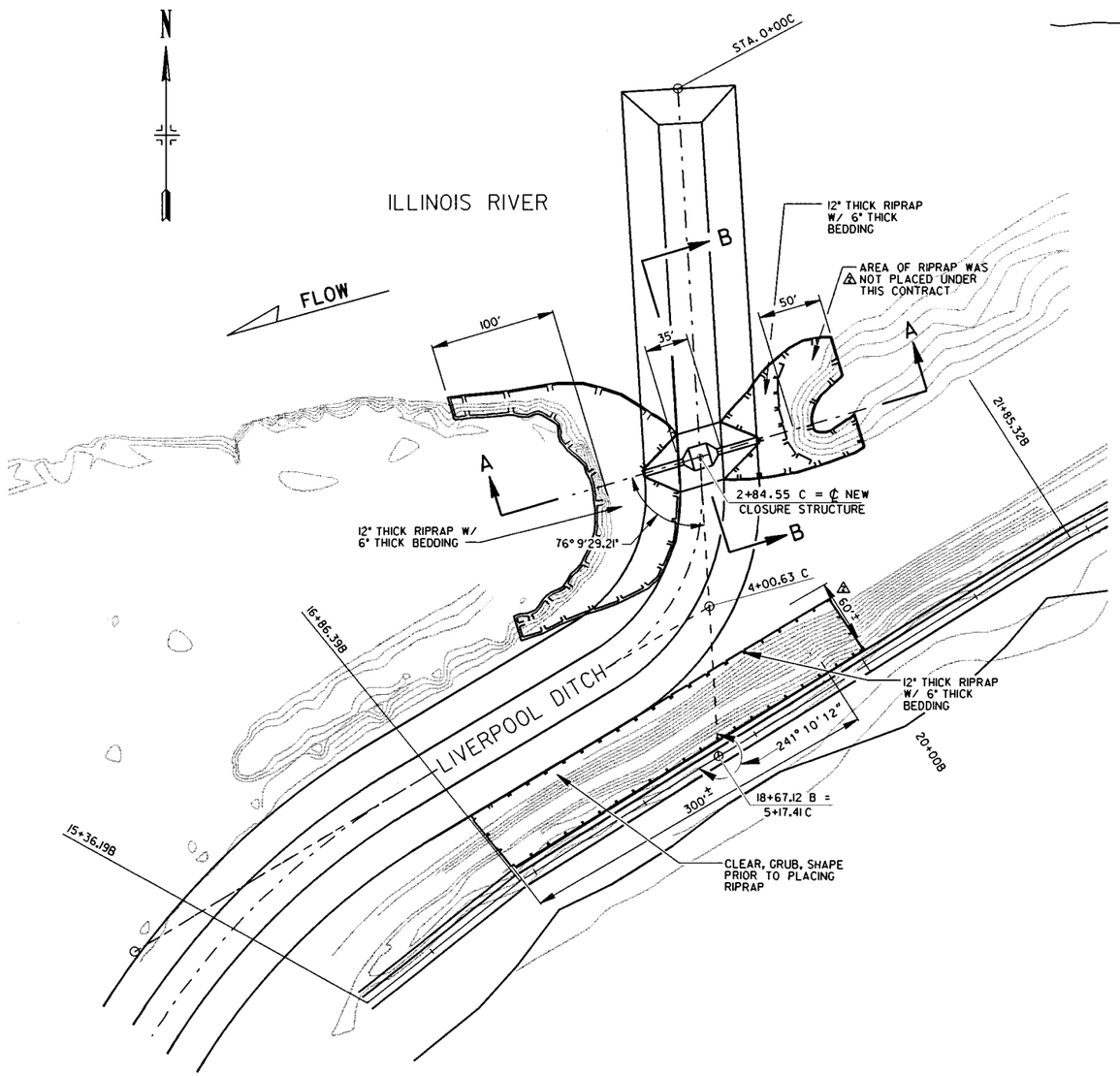

1 LIVERPOOL CLOSURE STRUCTURE PLAN

SCALE: 1" = 50'

50' 0 50'

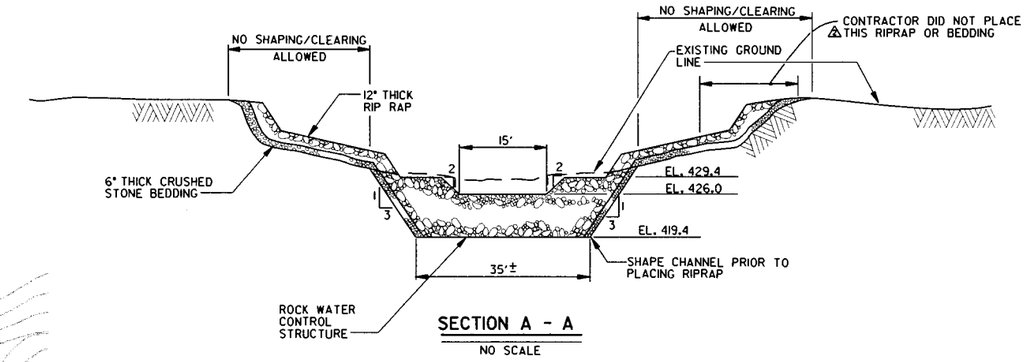

SECTION A - A

NO SCALE

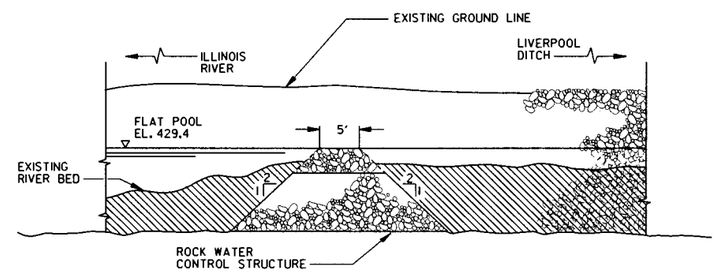

SECTION B - B

NO SCALE

US Army Corps of Engineers Rock Island District

Symbol	Description	Date	Approved
1	REVISED AS CONSTRUCTED	17 DEC 98	DRC/JJC
1	AMD. #1, ENLARGED STRUCTURE PLAN SCALE.	18 AUG 92	

Revisions

Designed By: DRC
Date: MAR 1999
Drawn By:
Scale: AS SHOWN
Checked By:
Drawing Code: 1-L1-3-1/67
Reviewed By: JJC
Solicitation Number: DACW25-97-B-0032

U.S. ARMY ENGINEER DISTRICT CORPS OF ENGINEERS ROCK ISLAND, ILLINOIS

ILLINOIS WATERWAY
ENVIRONMENTAL MANAGEMENT PROGRAM
LA GRANGE POOL, MILE 124 TO 129.5
LAKE CHAUTAUQUA
OPERATIONS AND MAINTENANCE

LIVERPOOL CLOSURE STRUCTURE PLAN & SECTIONS

Sheet Reference Number:
C170
Sheet 23 of 84

02-MAR-2005 13:26
$environ$/projects$EP52$OM Manual - Use this ordnep52c170.dgn

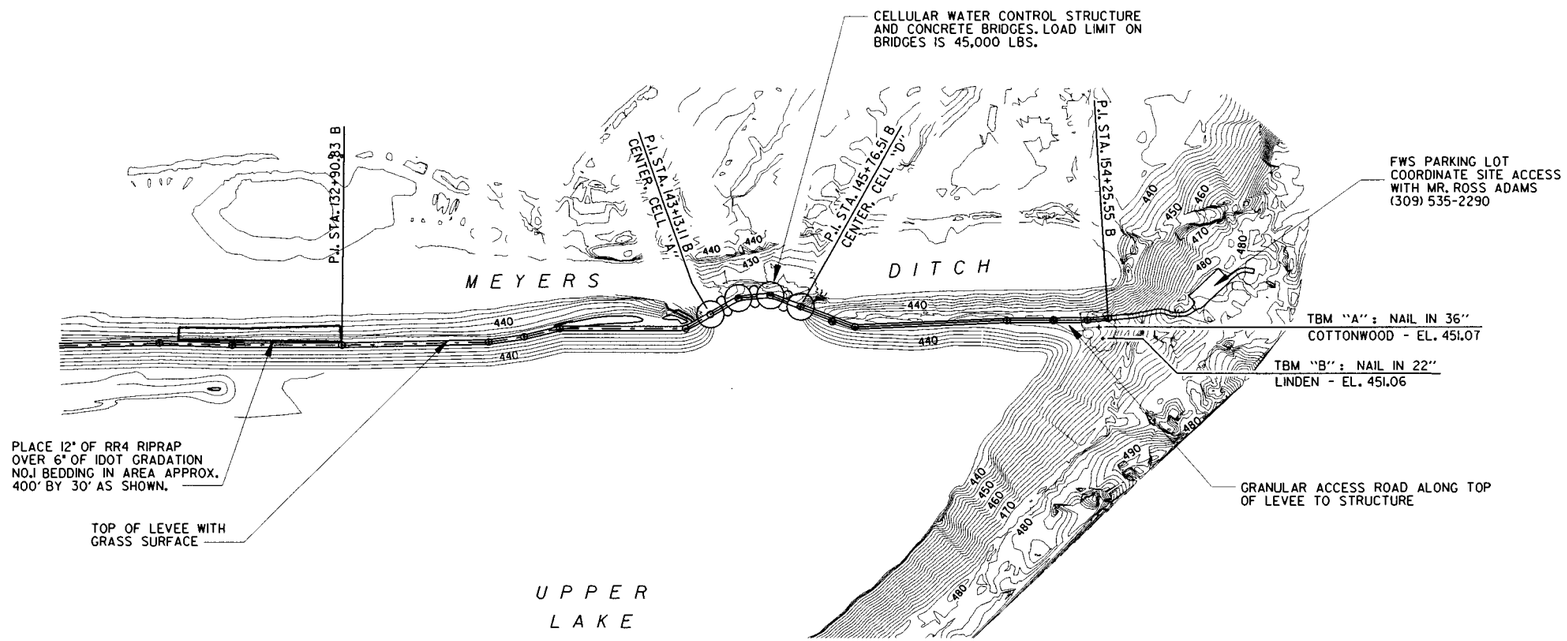

PERIMETER LEVEE PLAN

100 0 200 400 600
SCALE IN FEET

GENERAL SCOPE OF WORK:

SHAPE BANK AND PLACE APPROXIMATELY 400 TONS OF BEDDING AND 750 TONS OF RIPRAP.

CONSTRUCTION TONNAGE TOTALS
BEDDING - 340.67 TONS
RIPRAP - 798.25 TONS

NOTES:

1. THE TOWNSHIP AND COUNTY PLACES TEMPORARY LOAD LIMITS ON LOCAL ROADS.
2. THE CONTRACTOR SHOULD SCHEDULE THE WORK DURING DRY CONDITIONS TO MINIMIZE DAMAGE TO LEVEE EMBANKMENTS.
3. THE RIPRAP AREA SHALL BE STAKED IN THE FIELD. THE CONTRACTING OFFICER MAY ADJUST THE RIPRAP LIMITS TO BETTER COVER THE ERODED AREAS.
4. USE CORPS APPROVED ROCK SOURCES

US Army Corps of Engineers Rock Island District

Symbol	Description	Date	Approved
	AS CONSTRUCTED	31 MAR 04	HRP/DRC

Revisions

Designed By: DRC
Drawn By: MRC
Checked By: RAL
Reviewed By: DRR
Date: X XXX XXXX
Scale: AS SHOWN
Drawing Code: LFP XXXXX
Solicitation Number: DACW25-99-B-XXXX

U.S. ARMY ENGINEER DISTRICT
CORPS OF ENGINEERS
ROCK ISLAND, ILLINOIS

ILLINOIS WATERWAY
ENVIRONMENTAL MANAGEMENT PROGRAM
LA GRANGE POOL, MILE 124 TO 129.5
LAKE CHAUTAUQUA
OPERATIONS AND MAINTENANCE
MEYER'S DITCH
RIPRAP PLACEMENT LOCATIONS

Sheet Reference Number:
C180
Sheet 24 of 84

02-MAR-2006 13:42
dgnmr/d4ecodbgp/projects#CPS2#OMM Manual - Use this onemeys2c180.dgn

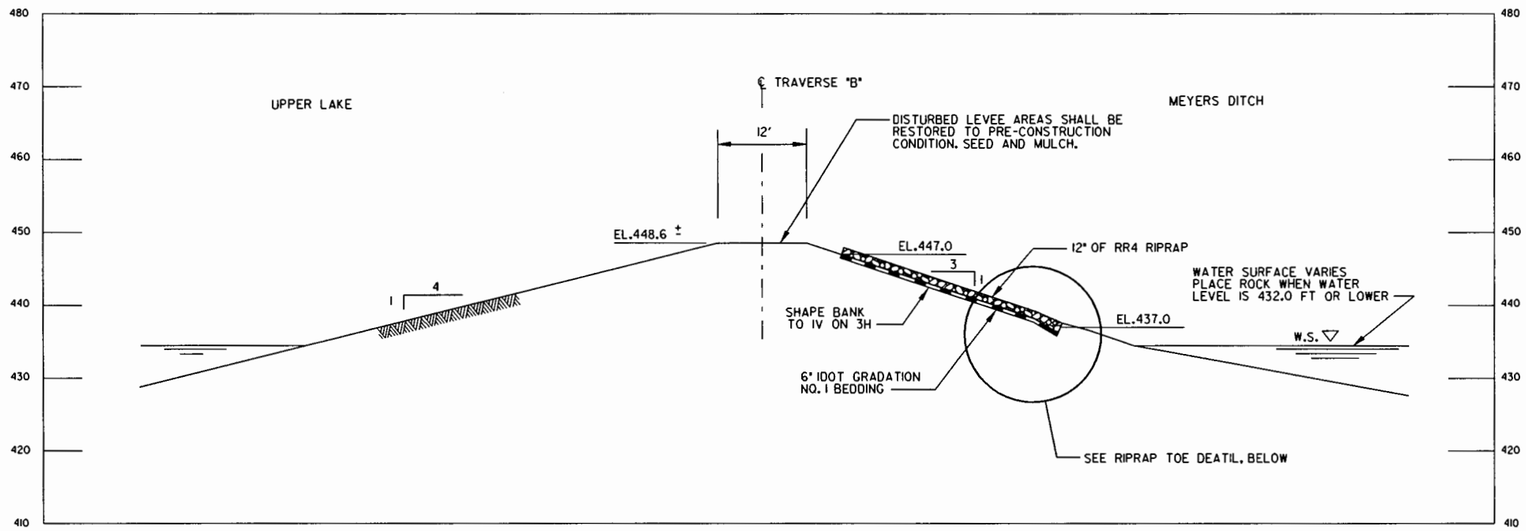

RIPRAP PLACEMENT

STA 135+00B TO STA 139+00B

NO SCALE

SEED MIX IF REQUIRED

TALL FESCUE, KY31 OR FAWN.....50 LBS PER ACRE
PERENNIAL RYEGRASS.....30 LBS PER ACRE
BLACKWELL SWITCHGRASS.....20 LBS PER ACRE

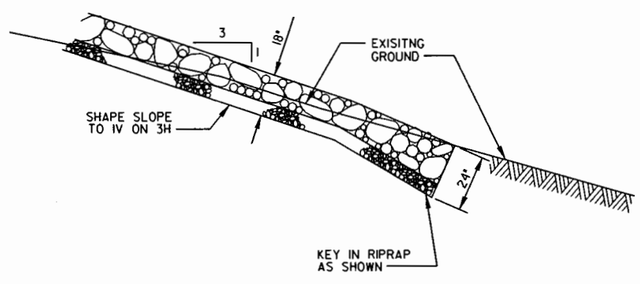

RIPRAP TOE DETAIL

NO SCALE

NOTES:

1. MARK AREAS TO RECEIVE RIPRAP IN THE FIELD WITH CONTRACTING OFFICER.
2. SHAPE BANK TO A 3H TO IV SLOPE PRIOR TO BEDDING AND RIPRAP PLACEMENT.
3. PLACE BEDDING AND RIPRAP.
4. REPAIR ANY DAMAGE TO LEVEE EMBANKMENT OR VEGETATION.

US Army Corps of Engineers Rock Island District

Symbol	Description	Date	Approved
AS CONSTRUCTED	Revisions	31 MAR 04	MRP/DRC

U.S. ARMY ENGINEER DISTRICT
CORPS OF ENGINEERS
ROCK ISLAND, ILLINOIS

Designed By: DRC
Drawn By: MRC
Checked By: RAL
Reviewed By: DRR
Date: X XXX XXXX
Scale: AS SHOWN
Drawing Code: LFP XXXXX
Solicitation Number: DACW25-99-B-XXXX

ILLINOIS WATERWAY
ENVIRONMENTAL MANAGEMENT PROGRAM
LA GRANGE POOL - MILE 124 TO 129.5
LAKE CHAUTAUQUA
OPERATIONS AND MAINTENANCE

MEYER'S DITCH
RIPRAP PLACEMENT
TYPICAL CROSS SECTIONS

Sheet Reference Number
C190
Sheet 25 of 84

02-MAR-2005 13:13
$$$$rvrdfs$$$$$$$$projects$$$$FPS2$$$$DGN Manual - Use this one$$$$$$$$c190.dgn

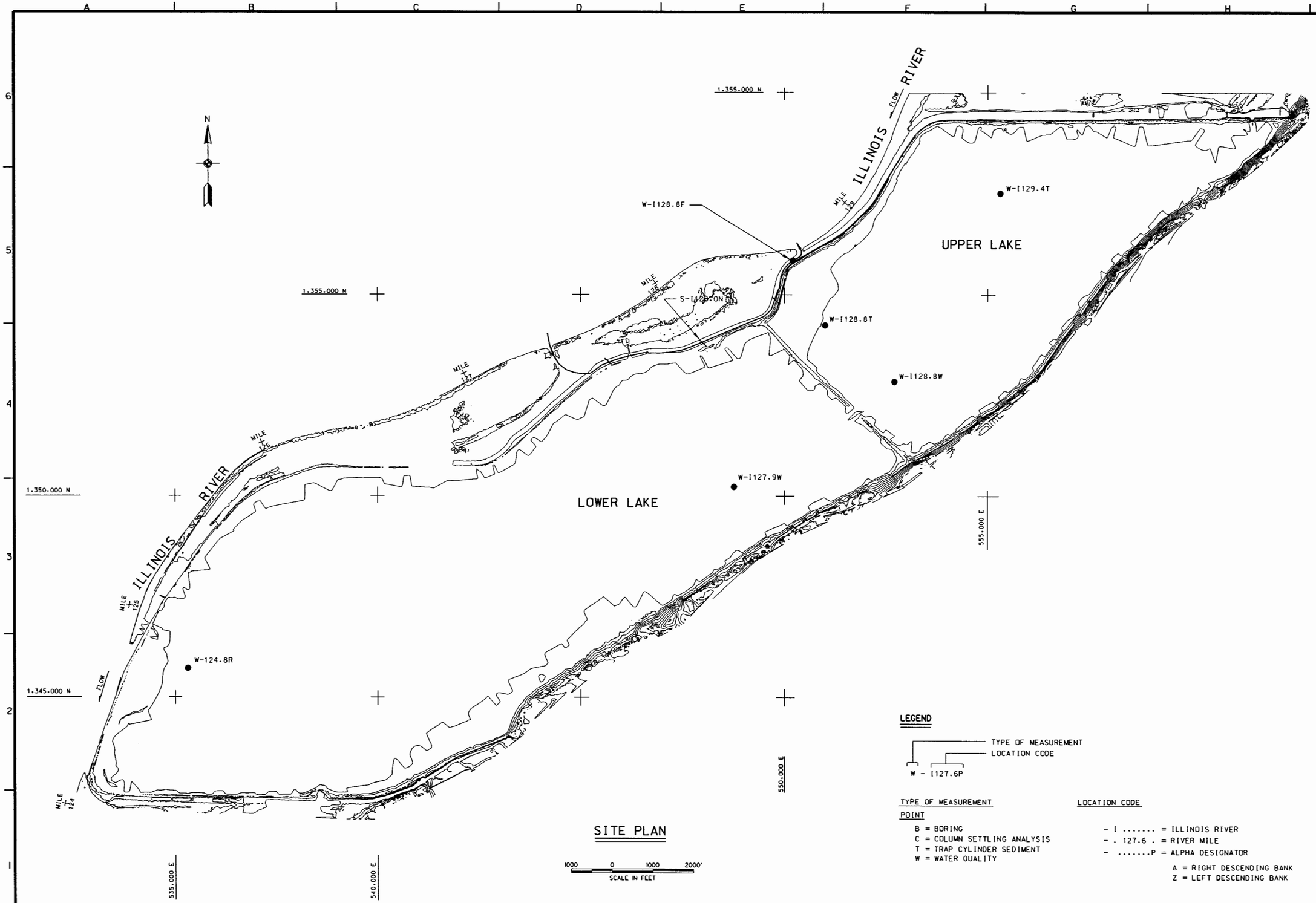

SITE PLAN

LEGEND

TYPE OF MEASUREMENT
LOCATION CODE

W - I127.6P

TYPE OF MEASUREMENT

POINT

- B = BORING
- C = COLUMN SETTLING ANALYSIS
- T = TRAP CYLINDER SEDIMENT
- W = WATER QUALITY

LOCATION CODE

- I ..... = ILLINOIS RIVER
- . 127.6 . = RIVER MILE
- .....P = ALPHA DESIGNATOR

A = RIGHT DESCENDING BANK
Z = LEFT DESCENDING BANK

US Army Corps of Engineers
Rock Island District

Symbol	Description	Date	Approved
△	AS CONSTRUCTED	17 DEC 98	
	AMD. #1 - MINOR REVISION	2 AUG 92	

Revisions

U.S. ARMY ENGINEER DISTRICT
CORPS OF ENGINEERS
ROCK ISLAND, ILLINOIS

Designed By: DJ/PWM/DRC/HD/AMW
Drawn By: MRC
Checked By:
Reviewed By: JJC
Date: MAR 1999
Scale: AS SHOWN
Drawing Code: 1-L1-3-1/67
Solicitation Number: DACW25-97-B-0032

ILLINOIS WATERWAY
ENVIRONMENTAL MANAGEMENT PROGRAM
LA GRANGE POOL, MILE 124 TO 129.5
LAKE CHAUTAUQUA
OPERATIONS AND MAINTENANCE

LAKE CHAUTAUQUA MONITORING PLAN

Sheet Reference Number:
C200
Sheet 26 of 84

21-MAR-2005 09:36
mmrdfs0ssdsp01/acts4GPS2-MGM manual - Use this ontemp52c200.dgn

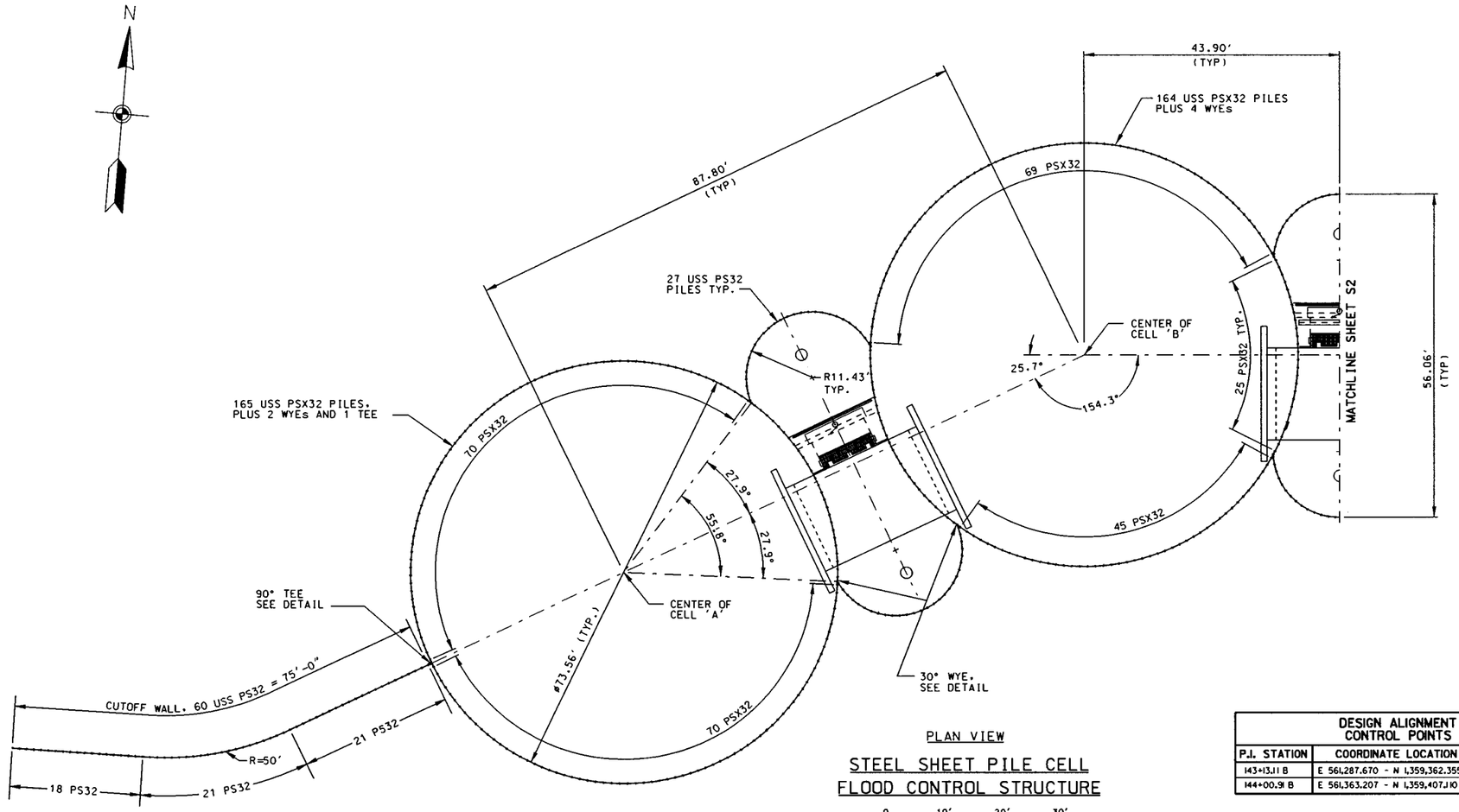

PLAN VIEW

STEEL SHEET PILE CELL
FLOOD CONTROL STRUCTURE

0 10' 20' 30'

DESIGN ALIGNMENT CONTROL POINTS		
P.I. STATION	COORDINATE LOCATION	NOTES
143+13.11 B	E 561,287.670 - N 1,359,362.355	CENTER, CELL "A"
144+00.91 B	E 561,363.207 - N 1,359,407.310	CENTER, CELL "B"

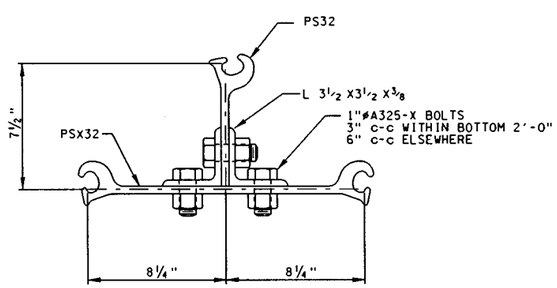

TYPICAL FABRICATED 90° "T" PILE

0 3" 6" 9" 12"

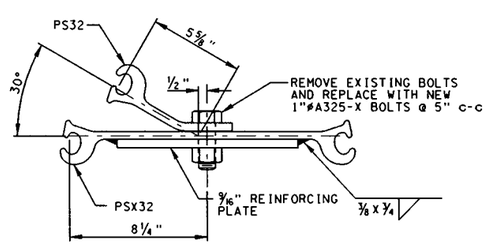

EXISTING FABRICATED 30° "Y" PILE

0 3" 6" 9" 12"

NOTES:

1. PILES SHALL BE DRIVEN TO REFUSAL. REQUIRED LENGTH OF SHEET PILES IN MAIN CELLS IS ESTIMATED TO BE 55 FEET.
2. ALL SHEET PILE IS USED AND FURNISHED BY THE GOVERNMENT. ALL WYE AND TEE PILES SHALL BE REFURBISHED OR FABRICATED BY THE CONTRACTOR FROM FURNISHED PILES. SEE SPECIFICATIONS 02411.
3. MATERIAL SHALL BE PLACED IN THE CELLS SUCH THAT UNEVEN PRESSURES ON THE CELL ARE MINIMIZED DURING THE FILLING OPERATION.
4. TOP ELEVATION OF MAIN CELL SHEET PILES IS 452.0. TOP ELEVATION OF CUTOFF WALLS IS 452.0 AT TEES AND 450.0 AT FREE ENDS. TOP OF SHEET PILE IN ARC CELLS WILL MATCH ADJACENT CONCRETE. SEE SHEET S4.

US Army Corps of Engineers
Rock Island District

Symbol	Description	Date	Approved
	Revisions		

Designed By: WM
Date: MAR 1999
Drawn By: BLL
Scale: AS SHOWN
Checked By: HD
Drawing Code: 1-L1-3-1/67
Reviewed By: RCA
Solicitation Number: DACW25-97-B-0032

U.S. ARMY ENGINEER DISTRICT
CORPS OF ENGINEERS
ROCK ISLAND, ILLINOIS

ILLINOIS WATERWAY
ENVIRONMENTAL MANAGEMENT PROGRAM
LA GRANGE LOCK AND DAM
MILE 80.2 TO 129.5
OPERATIONS AND MAINTENANCE

LEFT SIDE CELL STRUCTURE LAYOUT

Sheet Reference Number:
S10
Sheet 27 of 84

02-MAR-2005 13:52
mwarr drawdesign/pc1 acts MEPS2 ROM Manual - use this only w/ ep52d010.dgn

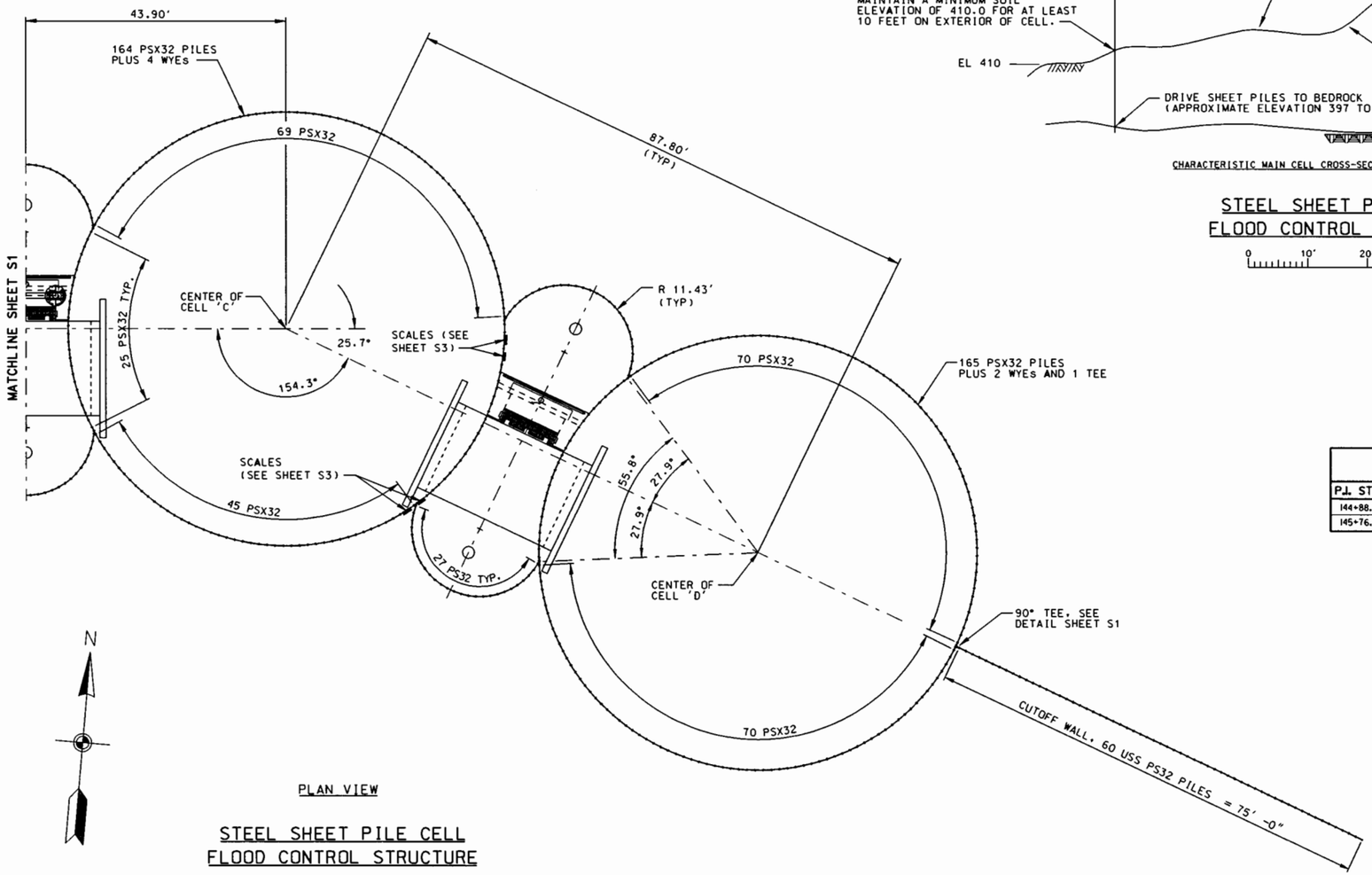

PLAN VIEW

STEEL SHEET PILE CELL
FLOOD CONTROL STRUCTURE

0 10' 20' 30'

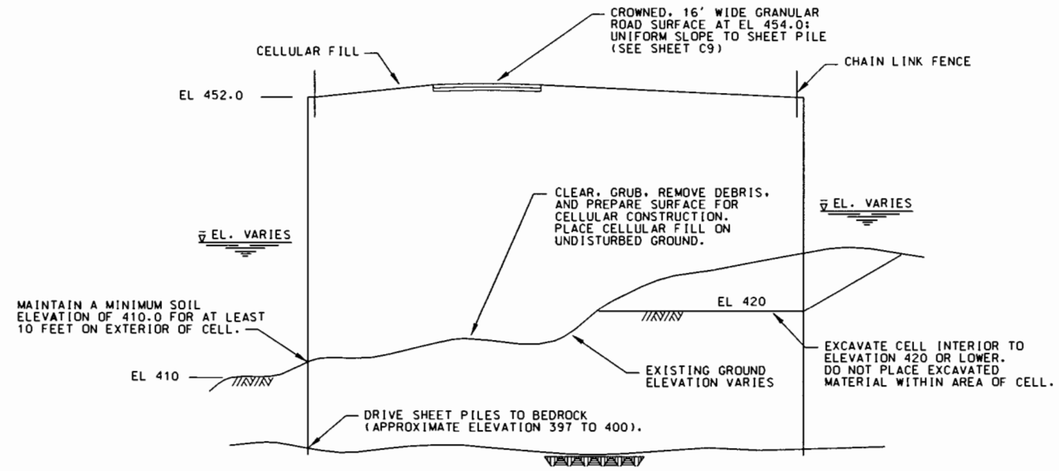

CHARACTERISTIC MAIN CELL CROSS-SECTION PERPENDICULAR TO ROAD

STEEL SHEET PILE CELL
FLOOD CONTROL STRUCTURE

0 10' 20' 30'

DESIGN ALIGNMENT CONTROL POINTS		
P.I. STATION	COORDINATE LOCATION	NOTES
144+88.71 B	E 561,450.680 - N 1,359,414.680	CENTER, CELL "C"
145+76.51 B	E 561,532.783 - N 1,359,383.568	CENTER, CELL "D"

TOTAL SHEET PILE SHOWN ON S1 AND S2:

2 TEE (SEE DETAIL SHEET S1)
12 WYE (SEE DETAIL SHEET S1)
658 PSX32
282 PS32

US Army Corps of Engineers
Rock Island District

Symbol	Description	Date	Approved
	Revisions		

Designed By: WM
Date: MAR 1999
Drawn By: BLL
Scale: AS SHOWN
Checked By: HD
Drawing Code: 1-L1-3-1/67
Revised By: RCA
Solicitation Number: DACW25-97-B-0032

U.S. ARMY ENGINEER DISTRICT
CORPS OF ENGINEERS
ROCK ISLAND, ILLINOIS

ILLINOIS WATERWAY
ENVIRONMENTAL MANAGEMENT PROGRAM
LA GRANGE POOL, MILE 124 TO 129.5
LAKE CHAUTAUQUA
OPERATIONS AND MAINTENANCE
RIGHT SIDE
CELL STRUCTURE
LAYOUT

Sheet Reference Number:
S20
Sheet 28 of 84

02-MAR-2005 13:45
sesmrofs#acoddmpr0|ects#CP52#CAM Manual - Use this only#ps52s020.dgn

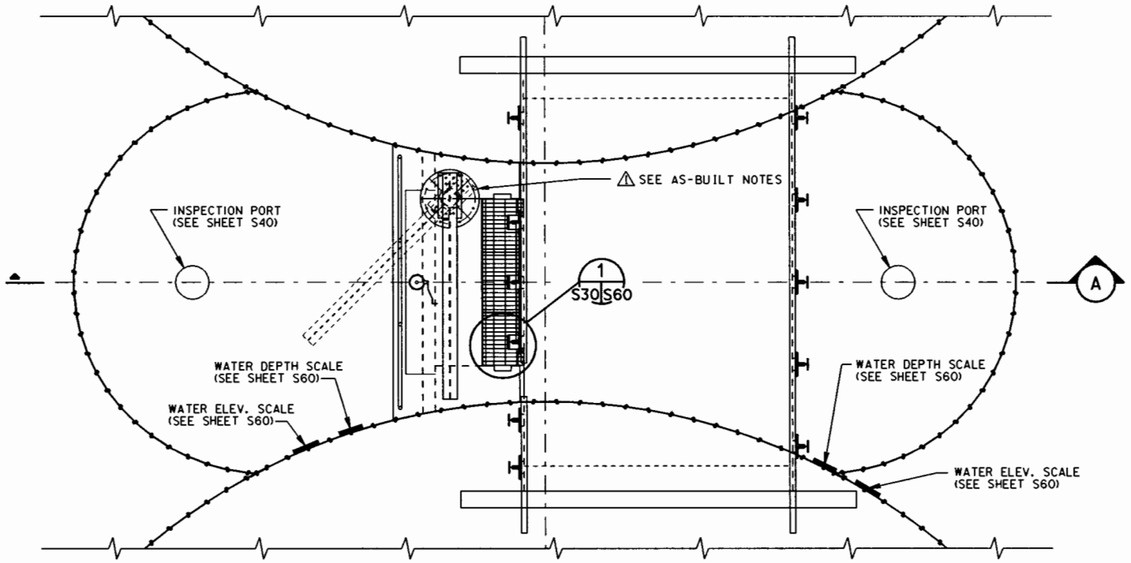

PLAN VIEW

CELL FLOODWAY

(3 REQ'D)

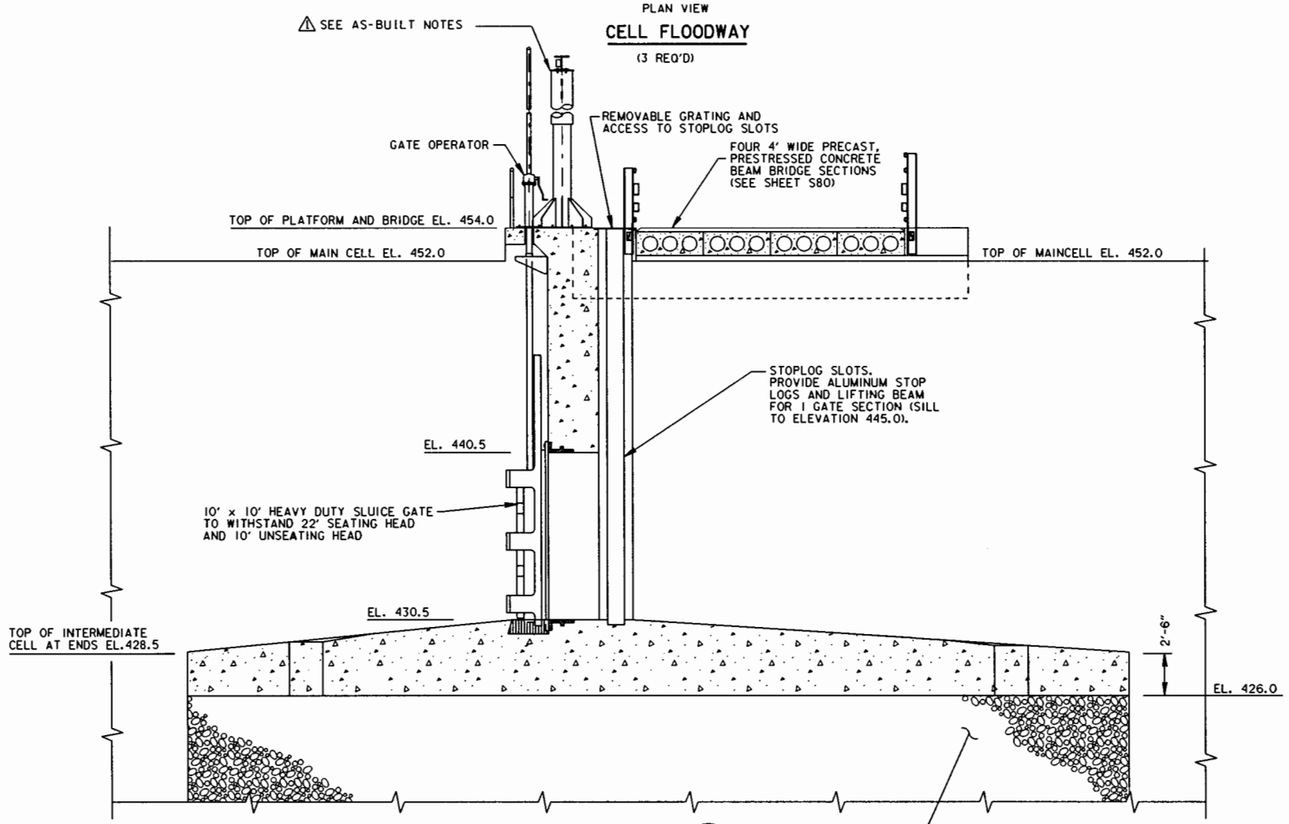

SECTION A

12" 0 5'
SCALE IN FEET

NOTE:

1. THE JIB CRANE SHALL BE FULL ROTATION EXCEPT BOOM SHALL BE PREVENTED FROM APPROACHING WITHIN ONE FOOT OF SLUICE GATE STEM FROM EITHER DIRECTION (APPROXIMATELY 315 DEGREES ROTATION).
2. THE CRANE SHALL HAVE A SECURITY DEVICE TO RESTRAIN THE BOOM IN THE STORED POSITION (OVER THE GATE PLATFORM, AS SHOWN) WHEN THE OPERATOR IS NOT PRESENT.
3. THE CRANE HOIST SHALL BE CAPABLE OF PICKING A STOPLOG FROM THE BOTTOM OF THE STOPLOG SLOTS, MOVING THE STOPLOG TO A POINT SEVEN FEET ABOVE THE MIDDLE (SIDE-TO-SIDE, NOT LENGTHWISE) OF THE BRIDGE SURFACE, PLACING THE STOPLOG IN A TRUCK BED, AND REVERSING THE ENTIRE OPERATION.
4. ONE JIB CRANE SHALL BE DELIVERED AND INSTALLED AT THE MIDDLE FLOODWAY. ANCHORS FOR IDENTICAL CRANES SHALL BE INSTALLED AT OTHER FLOODWAYS.
5. H-PILES AND SHEET PILES SHALL BE DRIVEN TO REFUSAL.

AS-BUILT NOTES:

1. SURFACE MOUNTED JIB CRANE WAS DELETED FROM PROJECT.
2. PROVIDE TRUCK MOUNTED JIB CRANE TO BE USED TO INSTALL AND REMOVE ALUMINUM STOP LOGS. MOUNT CRANE ON USFWS FLAT BED TRUCK.

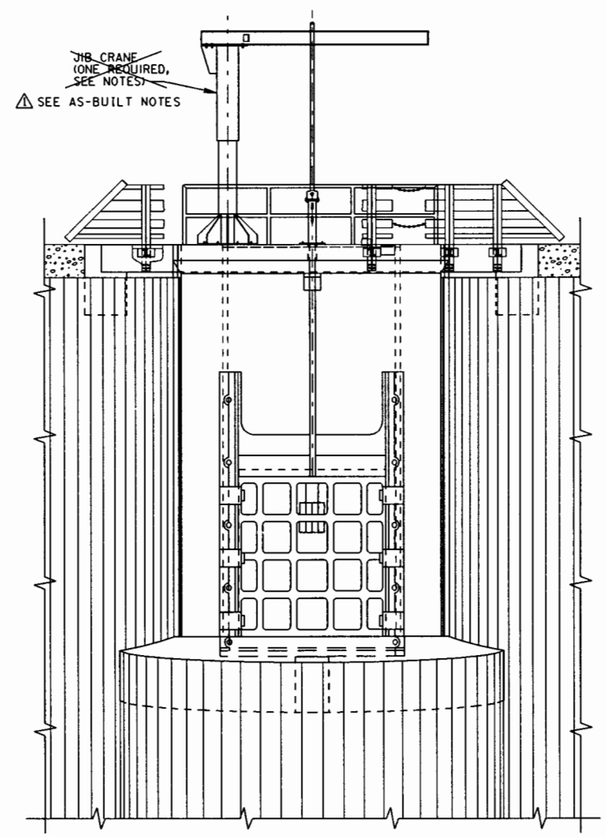

ELEVATION VIEW

CELL FLOODWAY

(3 REQ'D)

US Army Corps of Engineers Rock Island District

Symbol	Description	Date	Approved
	AS CONSTRUCTED	US FEB OSWR/DRC	

Revisions

Designed By: WM
Date: MAR 1999
Drawn By: BLL
Scale: AS SHOWN
Checked By: HD
Drawing Code: 1-L1-3-1/67
Reviewed By: RCA
Solicitation Number: DACW25-97-B-0032

U.S. ARMY ENGINEER DISTRICT CORPS OF ENGINEERS ROCK ISLAND, ILLINOIS

ILLINOIS WATERWAY
ENVIRONMENTAL MANAGEMENT PROGRAM
LA GRANGE POOL, MILE 124 TO 129.5
LAKE CHAUTAUQUA
OPERATIONS AND MAINTENANCE

FLOODWAY PLAN AND ELEVATION

Sheet Reference Number:
S30
Sheet 29 of 84

02-MAR-2005 13:45
mmcrdfs&coddr&projects&EP52&OM Manual - Use this on&mp052s030.dgn

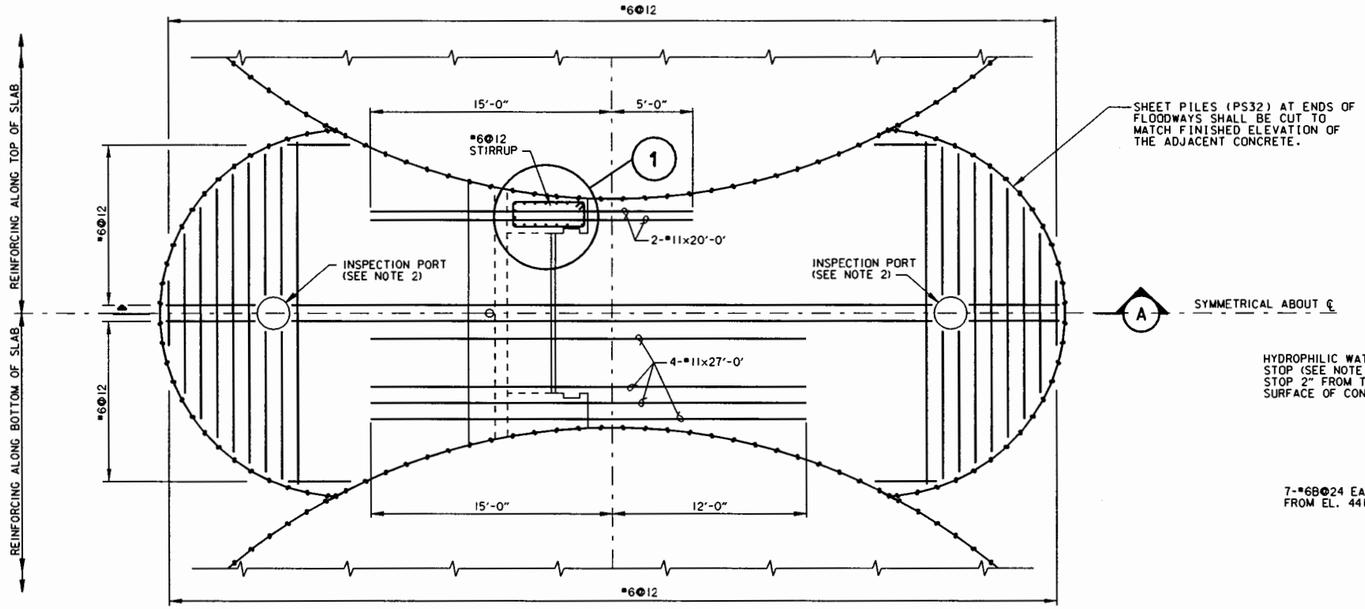

PLAN
CELL FLOODWAY
(3 REQ'D)

NOTES:

1. REINFORCING STEEL MAY BE SHIFTED TO CLEAR H-PILE AND FIELD BENT AT INSPECTION PORTS.
2. INSPECTION PORTS ARE 24 INCH DIA. WATERTIGHT, WITH BOLTED LID (NEENAH R-1916 OR R-6461 OR EQUIVALENT).
3. H-PILES AND GATE NOT SHOWN ON THIS SHEET.
4. HYDROPHILIC WATER STOP (SEE SPECIFICATIONS SECTION 03150) SHALL BE ATTACHED TO SHEET PILES AROUND PERIMETER OF SLAB AND TO SHEET PILE ADJACENT TO WALL BEFORE PLACEMENT OF CONCRETE.
5. ARC CELL SHEET PILE SHALL EXTEND TO AT LEAST ELEVATION 445 FOR FLOOD PROTECTION DURING CONSTRUCTION. IT MUST BE BRACED; BRACING MUST BE DESIGNED BY A PROFESSIONAL ENGINEER AND DESIGN MUST BE SUBMITTED FOR APPROVAL.

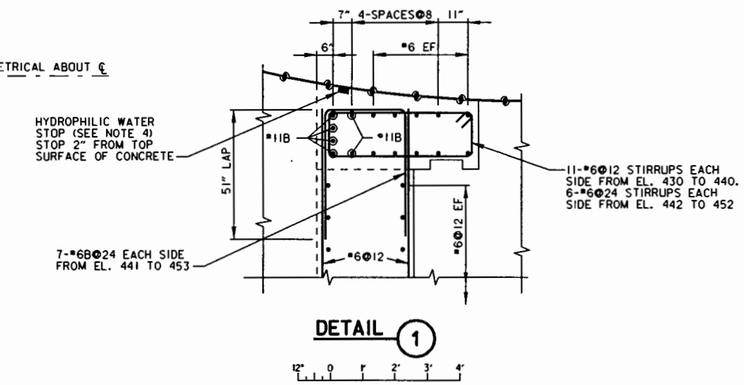

DETAIL 1

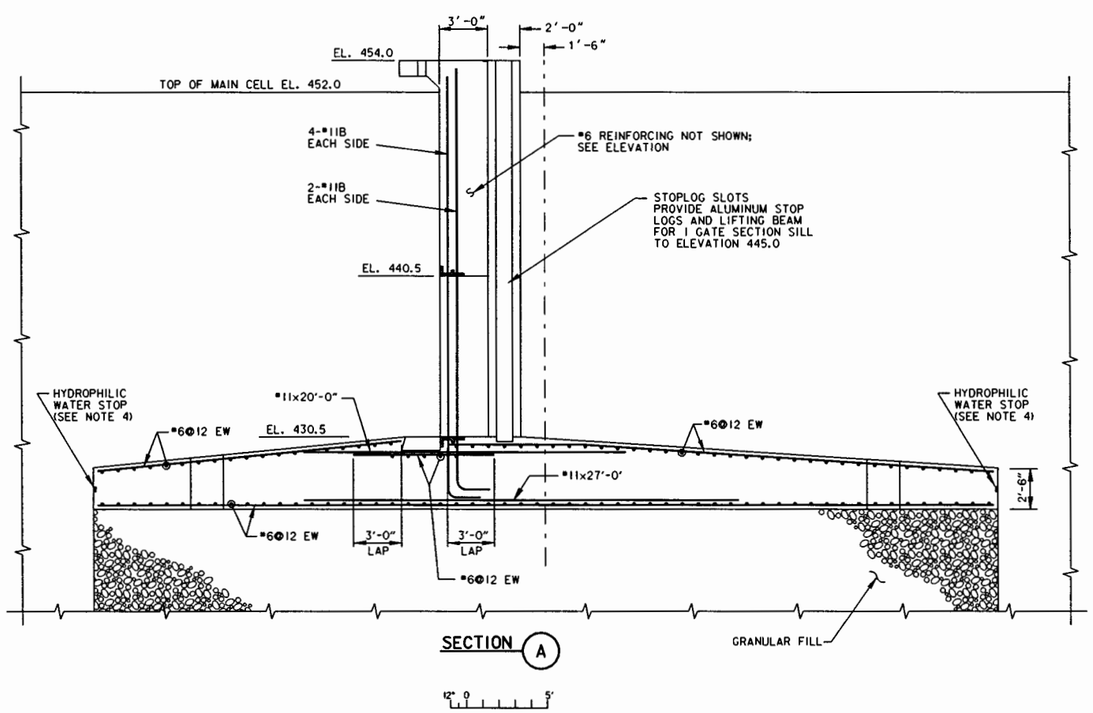

SECTION A

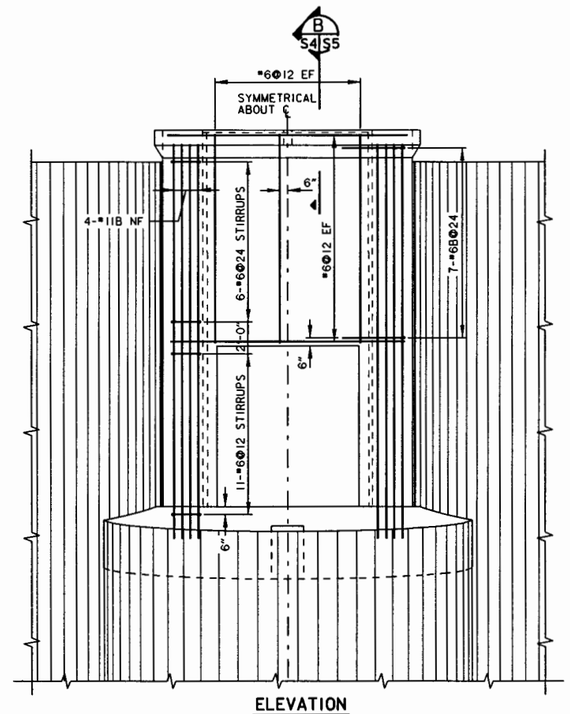

ELEVATION
CELL FLOODWAY
(3 REQ'D)

US Army Corps of Engineers
Rock Island District

Symbol	Description	Date	Approved
	Revisions		

Designed By: WM
Date: MAR 1999
Drawn By: DAP
Scale: AS SHOWN
Checked By: HD
Drawing Code: 1-L1-3-1/67
Reviewed By: RCA
Solicitation Number: DACW25-97-B-0032

U.S. ARMY ENGINEER DISTRICT
CORPS OF ENGINEERS
ROCK ISLAND, ILLINOIS

ILLINOIS WATERWAY
ENVIRONMENTAL MANAGEMENT PROGRAM
LA GRANGE POOL, MILE 124 TO 129.5
LAKE CHAUTAUQUA
OPERATIONS AND MAINTENANCE

SLAB AND WALL REINFORCEMENT

Sheet Reference Number:
S40
Sheet 30 of 84

02-MAR-2005 13:46
weinrofs#c0008#projects#EP32#OAM manual - use this one#ep32s040.dgn

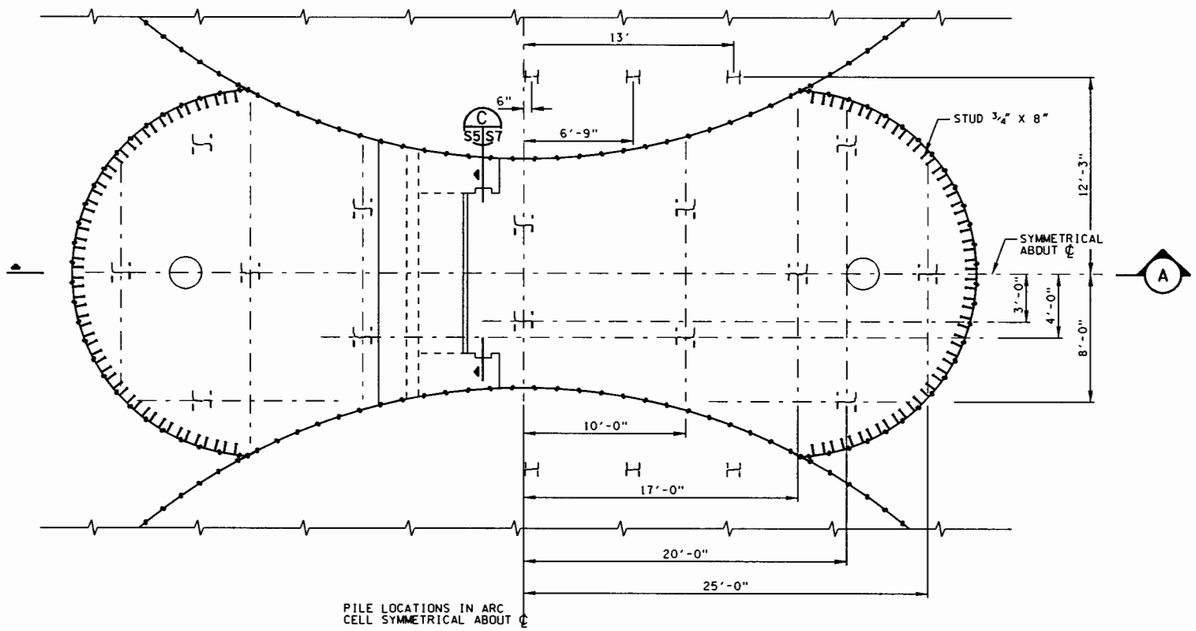

PLAN
CELL FLOODWAY
(3 REQ'D)

12" 0 5'

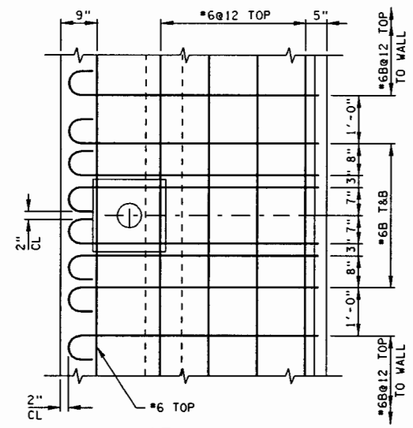

PARTIAL PLAN

12" 6" 0 1' 2'

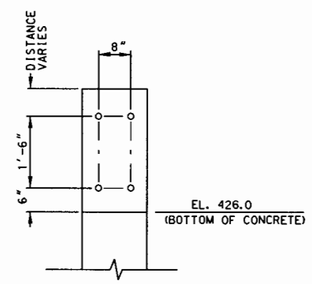

TYPICAL STUD LOCATION DETAIL

NO SCALE

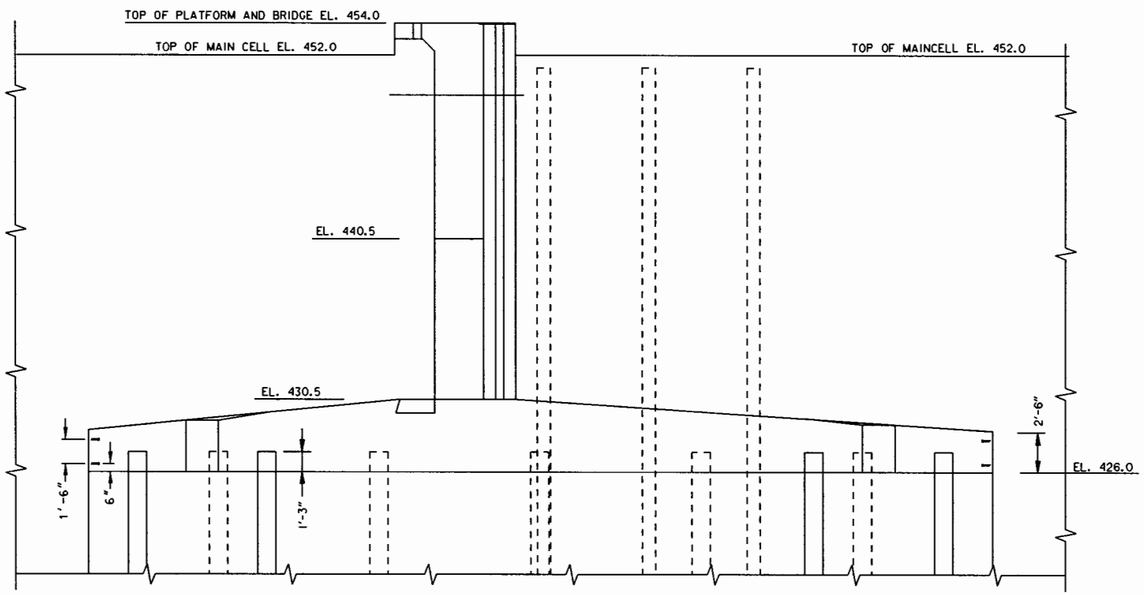

SECTION A

12" 0 5'

SCALE IN FEET

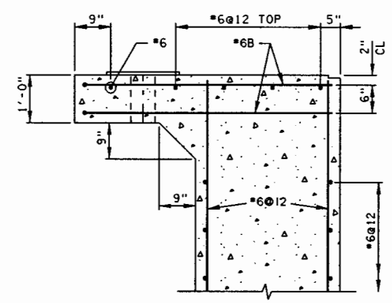

SECTION B
S4|S5

12" 6" 0 1' 2'

NOTE:

1. H PILES AND SHEET PILES SHALL BE DRIVEN TO REFUSAL.
2. H PILES IN FLOODWAY ARE HP 13X87 WITH 15" EMBEDMENT
3. H PILES FOR BRIDGE ABUTMENT ARE HP 10X42 (SEE SHEET S102).
4. THERE ARE FOUR 8" X ¾" DIA STUDS ON EACH PS32 PILE IN THE ARC. FORMING AN 8" WIDE AND 1'-6" TALL RECTANGLE CENTERED ON THE PILE AND WITH BASE 6" ABOVE THE BOTTOM OF THE CONCRETE.

US Army Corps of Engineers
Rock Island District

Symbol	Description	Date	Approved
	Revisions		

Designed By: WM
Drawn By: DEP
Checked By: HD
Reviewed By: RCA
Date: MAR 1999
Scale: AS SHOWN
Drawing Code: 1-L1-3-1/67
Solicitation Number: DACW25-97-B-0032

U.S. ARMY ENGINEER DISTRICT
CORPS OF ENGINEERS
ROCK ISLAND, ILLINOIS

ILLINOIS WATERWAY
ENVIRONMENTAL MANAGEMENT PROGRAM
LA GRANGE POOL, MILE 124 TO 129.5
LAKE CHAUTAUQUA
OPERATIONS AND MAINTENANCE

H-PILE LAYOUT AND PLATEFORM REINFORCEMENT

Sheet Reference Number:
S50
Sheet 31 of 84

02-MAR-2005 13:46
emmrdfs:ecodsrp:projects:PS2:dgn manual - use this on:mes52s050.dgn

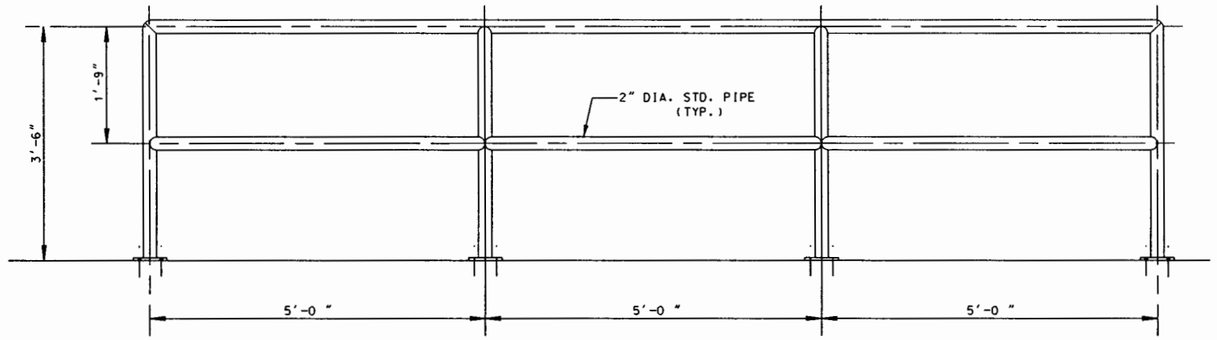

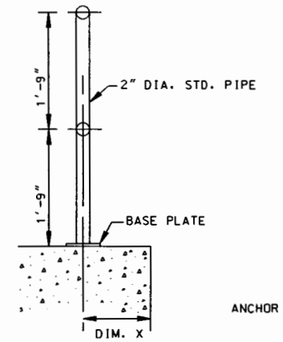

TYPICAL HANDRAIL SECTIONS

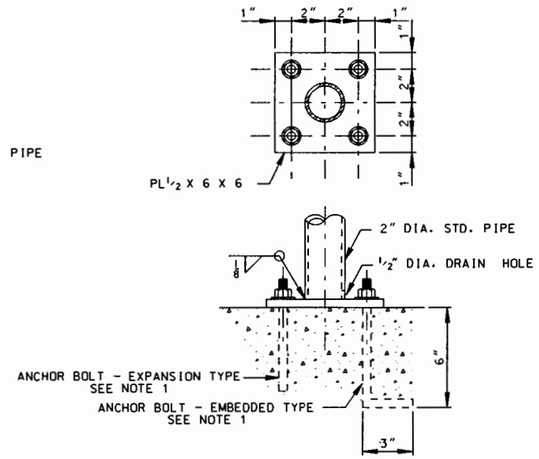

BASE PLATE DETAIL

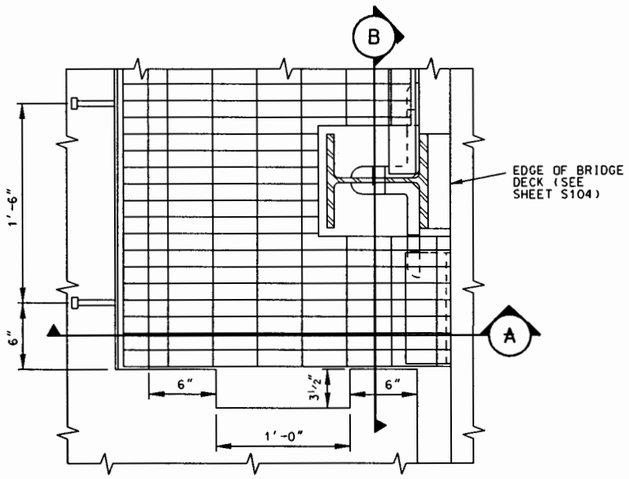

GRATE PLATFORM DETAIL (1) S3 | S6

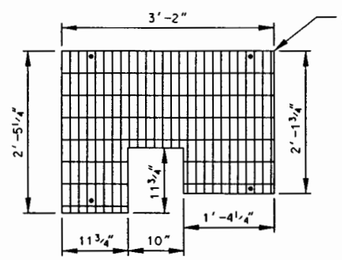

END GRATE
(6 REQ'D)
3 THUS, 3 OPPOSITE HAND

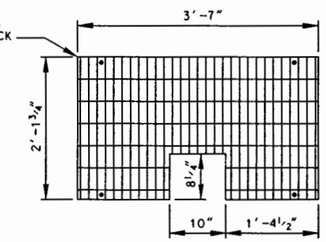

CENTER GRATE
(3 REQ'D)

GRATING

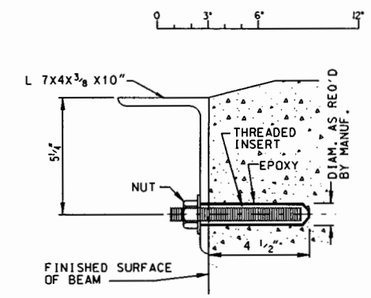

TYPICAL - ANCHOR BOLT DETAIL (2)

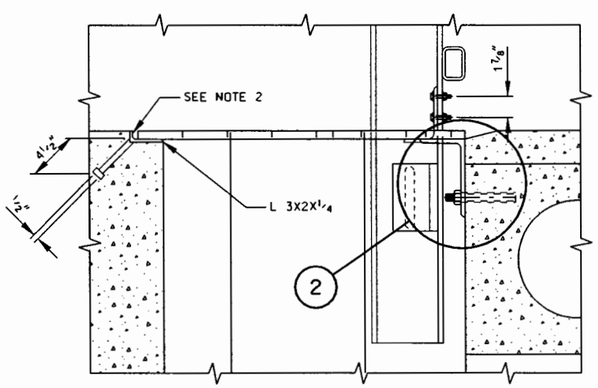

SECTION (A)

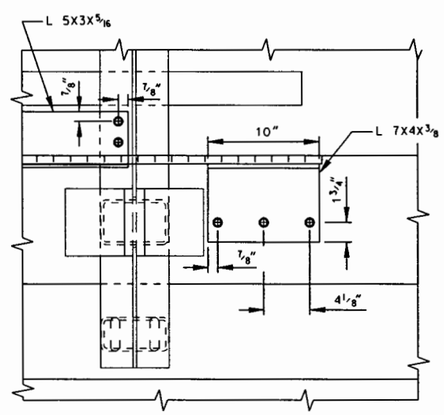

SECTION (B)

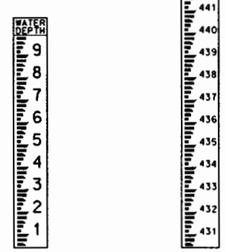

WATER DEPTH (2 REQ'D) WATER ELEVATION (2 REQ'D)

GAUGES
(NO SCALE)

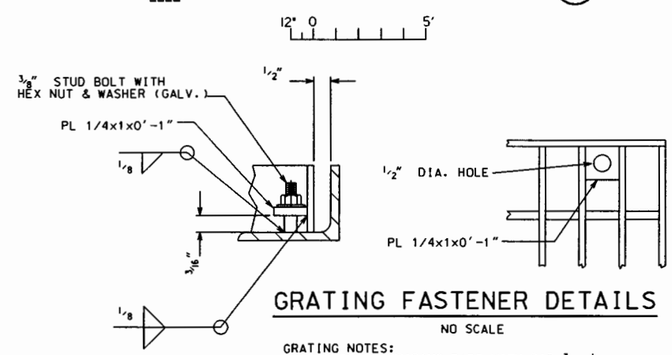

GRATING FASTENER DETAILS

NO SCALE

GRATING NOTES:
BAND ENDS OF BEARING BARS WITH BAR 3/4 x 1/8.
BEARING BARS ARE 3/4 x 1/8 on 1 3/16 CENTERS.
CROSS BARS ARE AT 4".
PROVIDE FASTENER AT EACH CORNER AS SHOWN.
THE FRAME AND GRATING ARE TO BE STEEL HOT DIP GALVANIZED IN ACCORDANCE WITH ASTM-123, AFTER FABRICATION.

NOTES:

1. ANCHOR BOLTS-1/2" DIAMETER, EITHER EMBEDDED OR EXPANSION TYPE. EXPANSION BOLTS SHALL HAVE A MINIMUM EMBEDMENT OF 5 INCHES. 4000 LB ULTIMATE PULLOUT, AND 6000 LB ULTIMATE SHEAR. ALL ANCHOR BOLTS AND NUTS SHALL BE GALVANIZED.
2. SAW CUT VERTICAL (2") LEG TO MATCH DEPTH OF SUPPLIED GRATING, SO THAT GRATING IS FLUSH WITH PLATFORM AND ROAD SURFACE.
3. WELD ALL PIPE JOINTS WITH CONTINUOUS BEAD. SIZE EQUAL TO PIPE WALL THICKNESS, AND DRESS SMOOTH. GALVANIZE SUPPORT ANGLES AND HANDRAIL AFTER FABRICATION.

US Army Corps of Engineers
Rock Island District

Symbol	Description	Date	Approved
	Revisions		

Designed By: WM
Drawn By: BLL
Checked By: HD
Reviewed By: RCA
Date: MAR 1999
Scale: AS SHOWN
Drawing Code: 1-L1-3-1/67
Solicitation Number: DACW25-97-B-0032

U.S. ARMY ENGINEER DISTRICT
CORPS OF ENGINEERS
ROCK ISLAND, ILLINOIS

ILLINOIS WATERWAY
ENVIRONMENTAL MANAGEMENT PROGRAM
LA GRANGE POOL, MILE 124 TO 129.5
LAKE CHAUTAUQUA
OPERATIONS AND MAINTENANCE

PLATFORM DETAILS

Sheet Reference Number:
S60
Sheet 32 of 84

02-MAR-2005 13:47
mmerrifs#mcdoo#projects#EP52#OGM Manual - Use this on#ep52s060.dgn

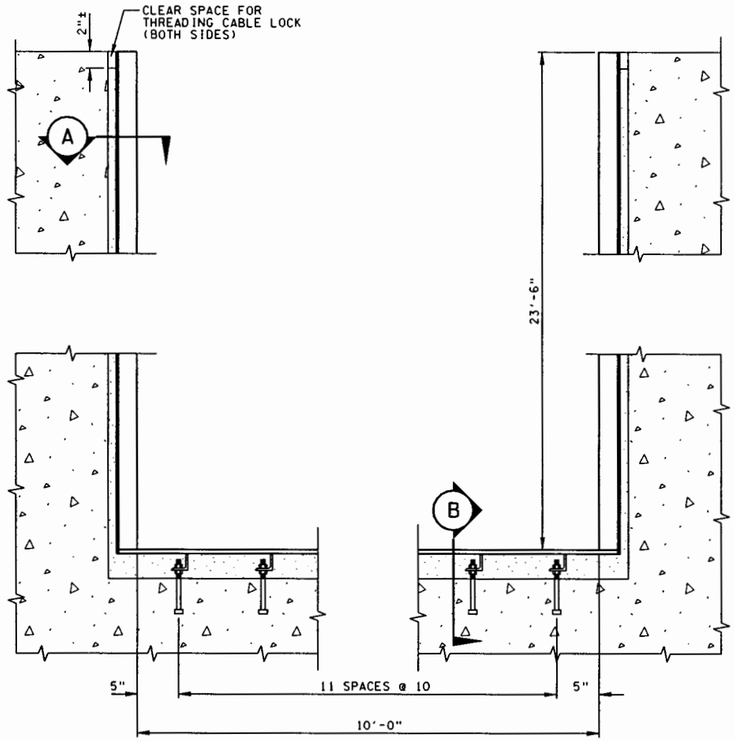

SECTION C S5|S7

12" 0 1'

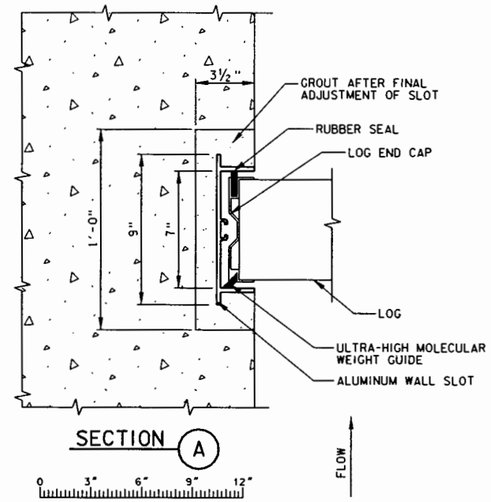

SECTION A

0 3" 6" 9" 12"

NOTE:
EMBEDDED ALUMINUM SURFACES SHALL BE COATED (SEE SPECIFICATIONS 05101).

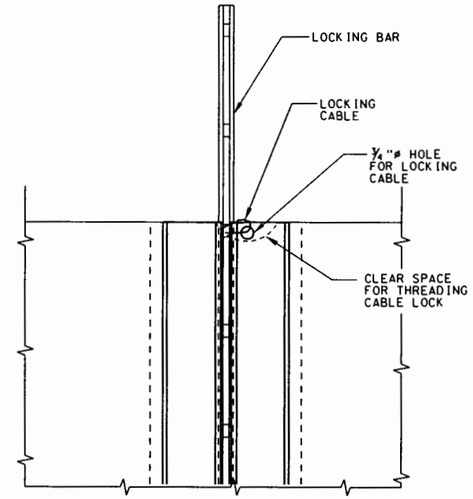

LOCKING DETAIL

0 1" 2" 3"

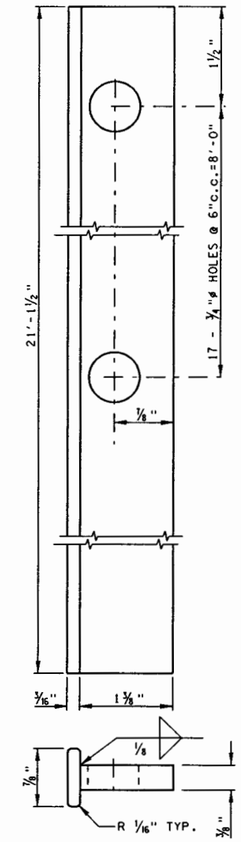

LOCKING BAR

MAKE 2 ALUMINUM 6061

0 1" 2" 3"

NOTE:

1. VERIFY LOCKING BAR FITS RECESS.
2. CONTRACTOR SHALL VERIFY THAT STOPLOGS FUNCTION ADEQUATELY WITH STOP LOG SLOTS.
3. STOPLOGS AND LIFTING BEAM SHALL BE STANDARD MANUFACTURER'S DESIGN (SEE SPECIFICATIONS SECTION 05502)

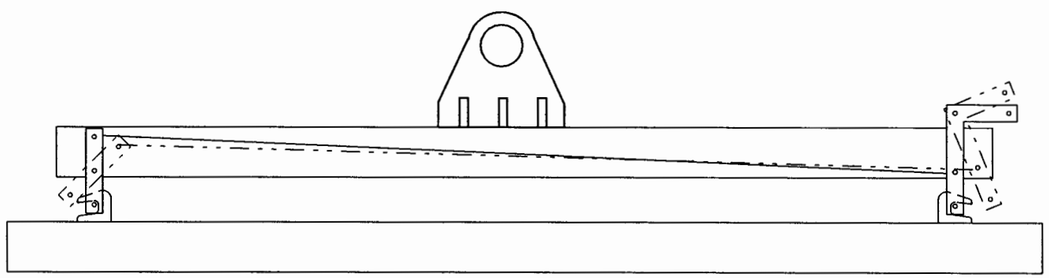

LIFTING BEAM

12" 0 1'

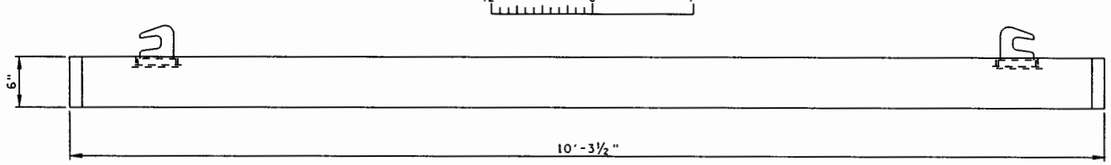

TYPICAL LOG

12" 0 1'

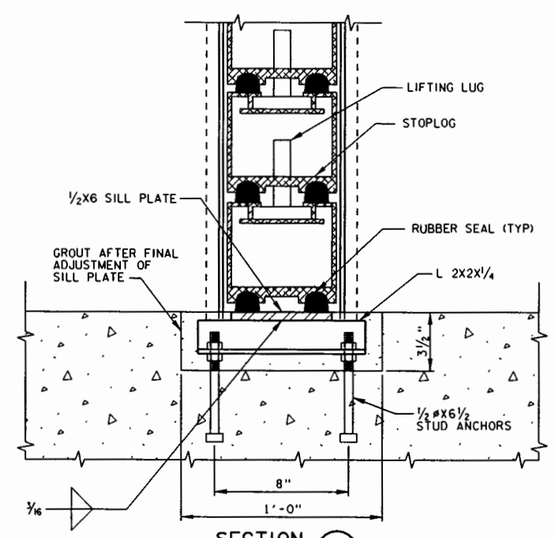

SECTION B

0 3" 6" 9" 12"

US Army Corps of Engineers Rock Island District

Symbol	Description	Date	Approved
	Revisions		

U.S. ARMY ENGINEER DISTRICT CORPS OF ENGINEERS ROCK ISLAND, ILLINOIS

Designed By: WM		Date: MAR 1999	
Drawn By: RDG		Scale: AS SHOWN	
Checked By: HD		Drawing Code: 1-L1-3-1/67	
Reviewed By: RCA		Solicitation Number: DACW25-97-B-0032	

ILLINOIS WATERWAY
ENVIRONMENTAL MANAGEMENT PROGRAM
LA GRANGE POOL, MILE 124 TO 129.5
LAKE CHAUTAUQUA
OPERATIONS AND MAINTENANCE

STOPLOG DETAILS

Sheet Reference Number: S70

Sheet 33 of 84

02-MAR-2005 13:47

GENERAL NOTES

1. Base drawing copied from Illinois Department of Transportation, Standard Plans, Volume I: Precast Prestressed Concrete Deck Beam Bridges, 1 Nov 1995.
2. A Calcium Nitrite Corrosion inhibitor shall be used in the concrete for precast prestressed concrete deck beams.

DESIGN SPECIFICATIONS

1992 AASHTO, 1993 & 1994 Interims
HS20-44 Loading. Load Factor Design.

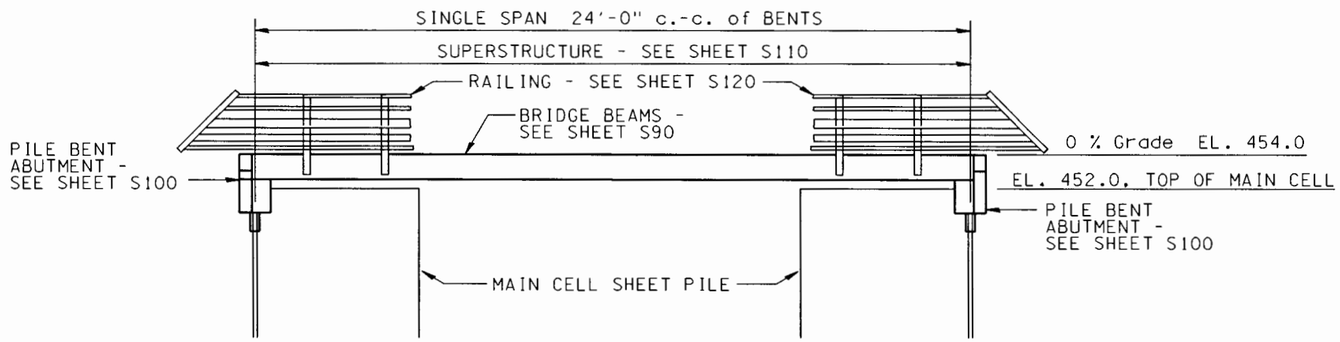

ELEVATION

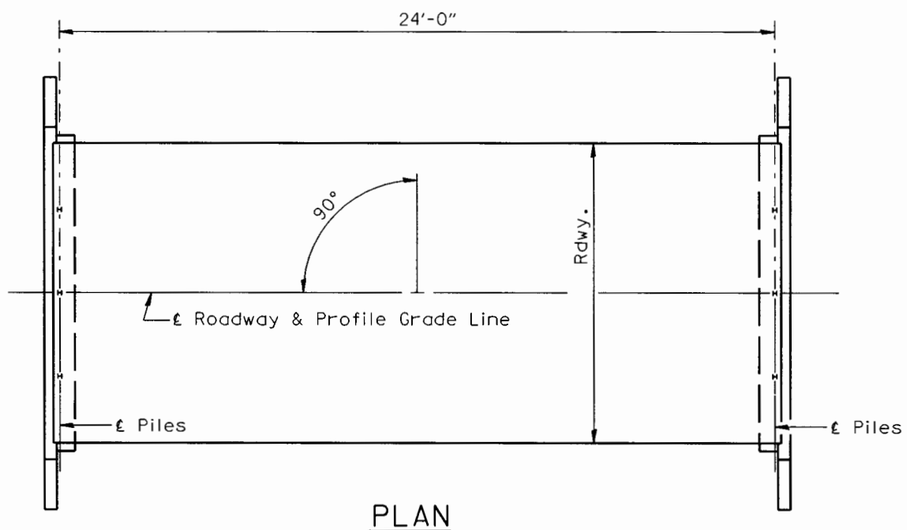

PLAN

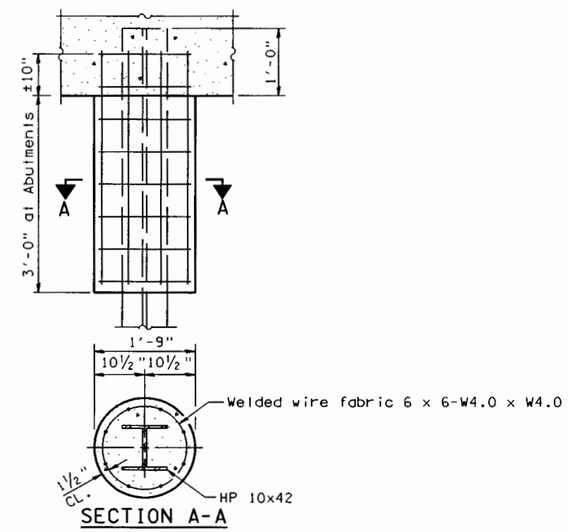

SECTION A-A

DETAIL OF HP
PILE ENCASEMENT

US Army Corps of Engineers
Rock Island District

Symbol	Description	Date	Approved
	Revisions		

Designed By: HD
Date: MAR 1999
Drawn By: RDG
Scale: AS SHOWN
Checked By: WM
Drawing Code: 1-L1-3-1/67
Reviewed By: RCA
Solicitation Number: DACW25-97-B-0032

U.S. ARMY ENGINEER DISTRICT
CORPS OF ENGINEERS
ROCK ISLAND, ILLINOIS

ILLINOIS WATERWAY
ENVIRONMENTAL MANAGEMENT PROGRAM
LA GRANGE POOL, MILE 124 TO 129.5
LAKE CHAUTAUQUA
OPERATIONS AND MAINTENANCE

BRIDGE
GENERAL PLAN AND NOTES

Sheet Reference Number:
S80
Sheet 34 of 84

02-MAR-2005 13:48
e:\mvr\fre\coddep\projects\ef52\ndm\ manual - use this ndm\ef52s080.dgn

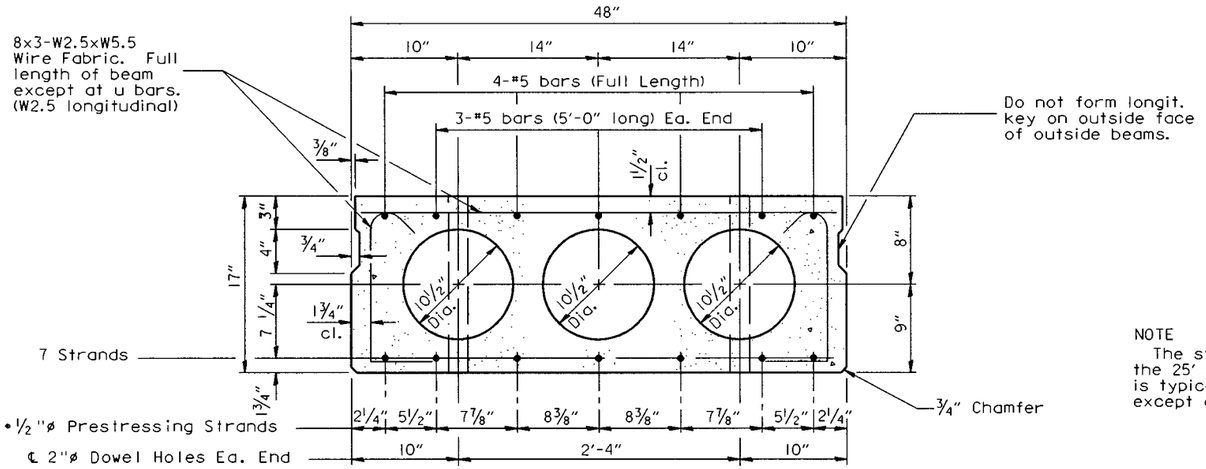

CROSS SECTION

(25' SPAN)

•Stressed to 28,900 lbs.

NOTE:

Place strands symmetrically about ℄ of beam.

NOTE

The std. reinf. shown on the 25' span cross section is typical for all spans, except as shown.

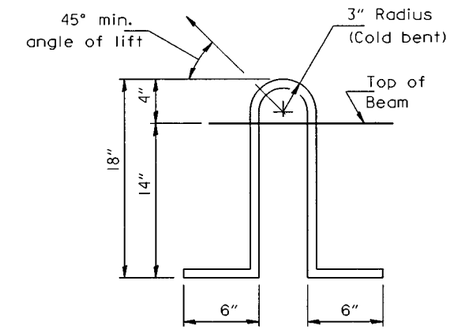

LIFTING LOOP DETAIL

Lifting loops shall be 2, 1/2"ø-270 ksi strands, as shown. Alternate approved lifting devices are also acceptable.

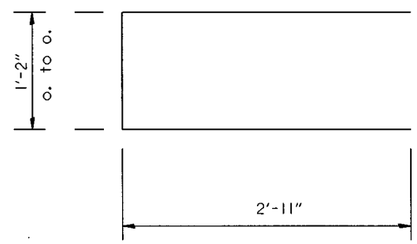

BAR U

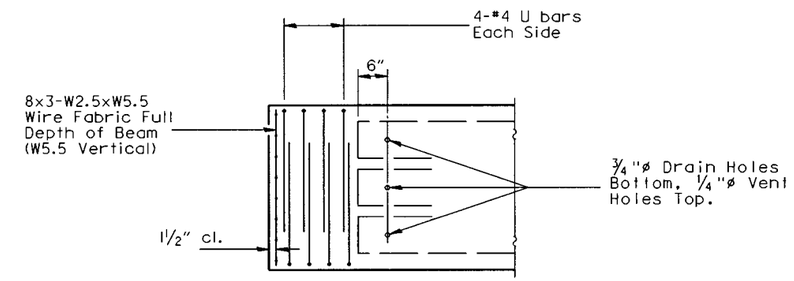

END REINFORCEMENT

(RIGHT ANGLE)

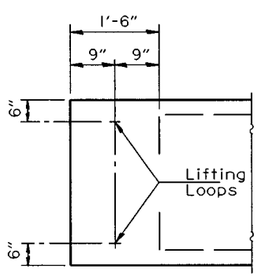

END BLOCK DETAILS

Each beam shall have four Lifting Loops, two at each end of beam cast in locations shown above. Loops shall be burned off after beams have been erected.

DESIGN STRESSES

f'c = 5,000 p.s.i.
f'ci = 4,000 required release strength
f's = 270,000 p.s.i. (1/2" ø Strand)
fsi = 189,000 p.s.i. (1/2" ø Strand)
fy = 60,000 p.s.i.

NOTES

1. Base drawing copied from Illinois Department of Transportation, Standard Plans, Volume I: Precast Prestressed Concrete Deck Beam Bridges, 1 Nov 1995.
2. Prestressing steel shall be uncoated high strength, stress relieved 7-wire strand, Grade 270.
3. The nominal diameter shall be 1/2" and the nominal cross-sectional area shall be 0.153 square inches.
4. Reinforcement bars shall conform to AASHTO M31, M42 or M53, Grade 60.
5. Rail Post anchor devices shall be cast into outside beam as elsewhere specified.
6. Low-relaxation strands may be substituted for the stress relieved strands. The initial prestressing force applied to each strand shall be the same as for the stress relieved strands (28,900 lbs.).
7. Keyway surfaces shall be cleaned to remove form oil or other bond breaking material prior to shipment of the beams. Cleaning shall be done by sandblasting the keyway areas between the top of the beam and the bottom edge of the key.
8. See sheets S103 and S104 for location of embedded metals.

US Army Corps of Engineers Rock Island District

Symbol	Description	Date	Approved
	Revisions		

Designed By: HD		Date: MAR 1999	
Drawn By: RDG		Scale: AS SHOWN	
Checked By: WM		Drawing Code: 1-L1-3-1/67	
Reviewed By: RCA		Solicitation Number: DACW25-97-B-0032	

U.S. ARMY ENGINEER DISTRICT CORPS OF ENGINEERS ROCK ISLAND, ILLINOIS

ILLINOIS WATERWAY
ENVIRONMENTAL MANAGEMENT PROGRAM
LA GRANGE POOL, MILE 124 TO 129.5
LAKE CHAUTAUQUA
OPERATIONS AND MAINTENANCE

BRIDGE BEAM DETAILS

Sheet Reference Number:
S90
Sheet 35 of 84

02-MAR-2005 13:48
wmarcfs$:[projects]EP52405M manual - lee mis only\ep52405b.dgn

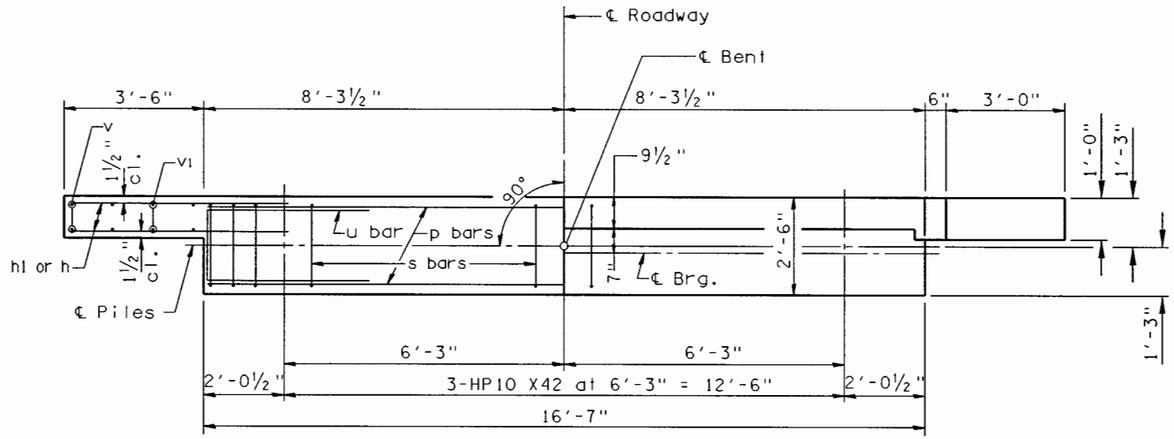

PLAN

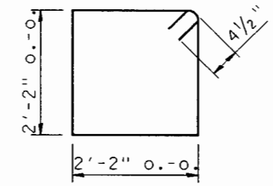

BAR s

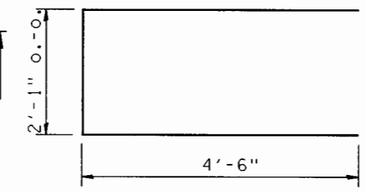

BAR u

BILL OF MATERIAL FOR ONE ABUTMENT

Bar	No.	Size	Length	Shape
h	16	#4	5'-0"	
h1	4	#4	5'-3"	
h2	6	#4	16'-3"	
p	10	#5	16'-3"	
s	18	#4	9'-5"	
u	8	#6	11'-1"	
v	8	#4	2'-6"	
v1	8	#4	3'-5"	
v2	34	#4	3'-1"	
Concrete Structures			8.3 Cu.Yds.	
Reinforcement Bars			860 Lbs.	

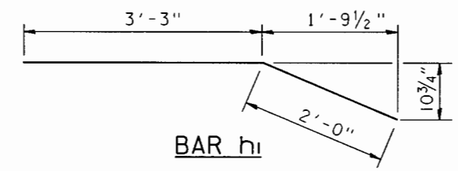

BAR h1

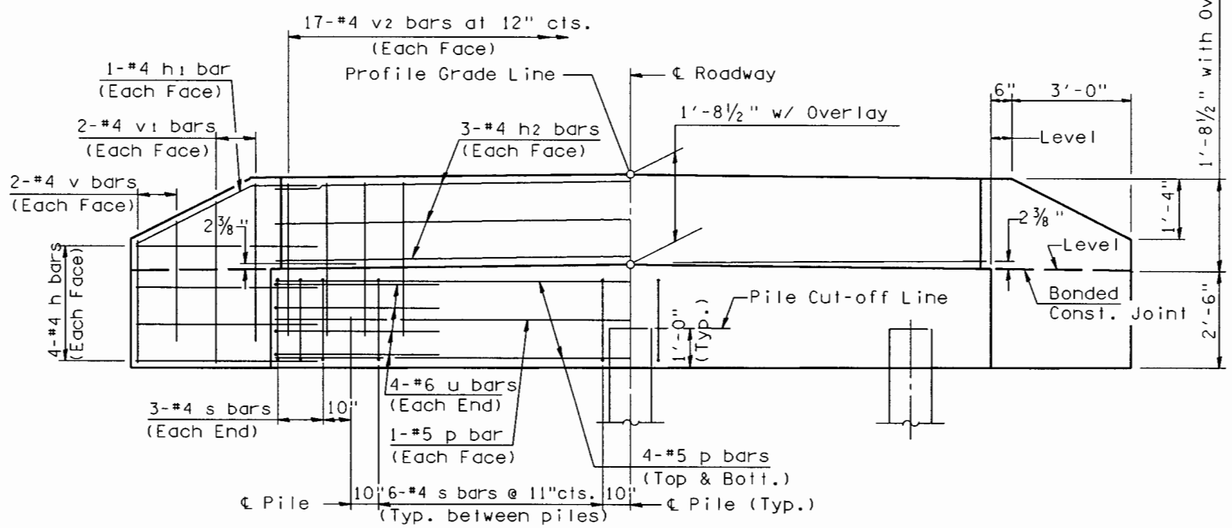

ELEVATION

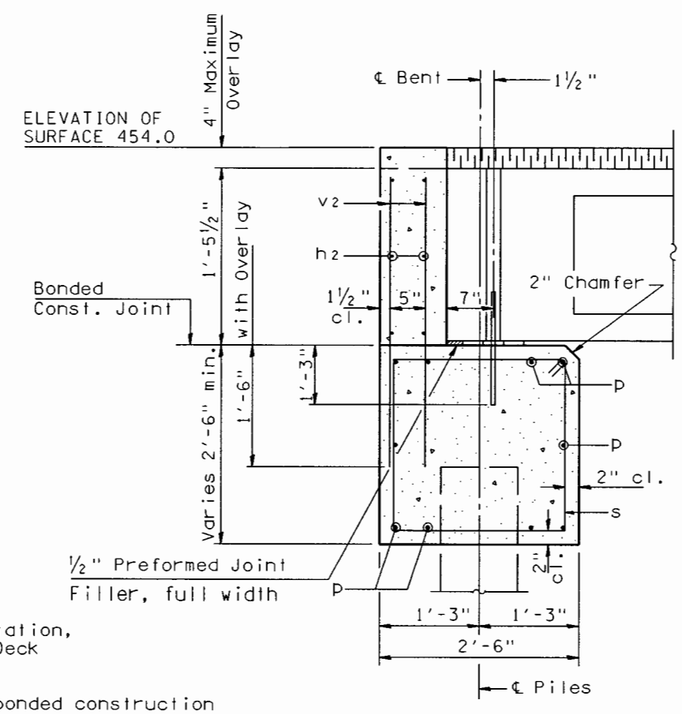

SECTION THRU ABUTMENT

(At Right Angles)

DESIGN STRESSES

f'c = 3,500 psi
fy = 60,000 psi

NOTES:

1. Base drawing copied from Illinois Department of Transportation, Standard Plans, Volume I: Precast Prestressed Concrete Deck Beam Bridges, 1 Nov 1995.
2. The Backwall and the portion of the Wingwalls above the bonded construction joint shall be cast against the in-place beam.
3. Reinforcement bars shall conform to Grade 60, AASHTO M31, M42 or M53.

US Army Corps of Engineers
Rock Island District

Symbol	Description	Date	Approved
	Revisions		

Designed By:
Date: MAR 1999
Drawn By:
Scale: AS SHOWN
Checked By:
Drawing Code: 1-L1-3-1/67
Reviewed By:
Solicitation Number: DACW25-97-B-0032

U.S. ARMY ENGINEER DISTRICT
CORPS OF ENGINEERS
ROCK ISLAND, ILLINOIS

ILLINOIS WATERWAY
ENVIRONMENTAL MANAGEMENT PROGRAM
LA GRANGE POOL, MILE 124 TO 129.5
OPERATIONS AND MAINTENANCE
LAKE CHAUTAUQUA

BRIDGE
P.P.C. DECK BEAM
PILE BEAM ABUTMENT

Sheet Reference Number:
S100
Sheet 36 of 84

02-MAR-2005 13:48

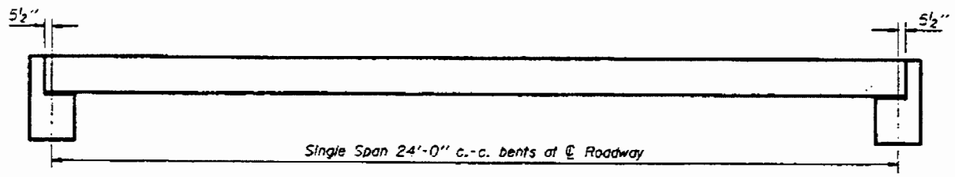

TYPICAL ELEVATIONS

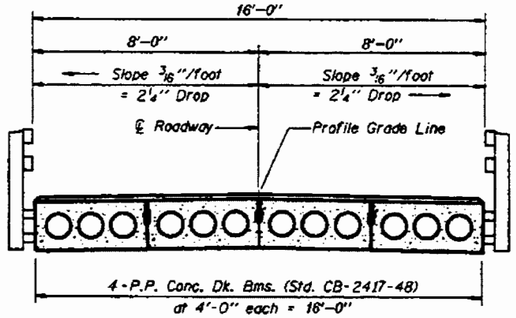

CROSS SECTION

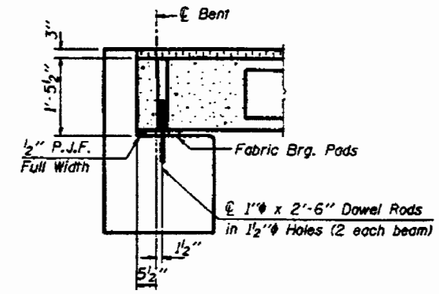

SECTION AT ABUTS.

(Along ℄ Beams)

SEE SHEET S102 FOR DETAILS

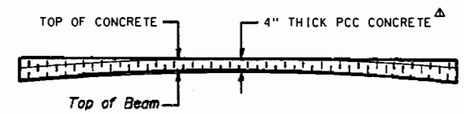

PROFILE OF OVERLAY

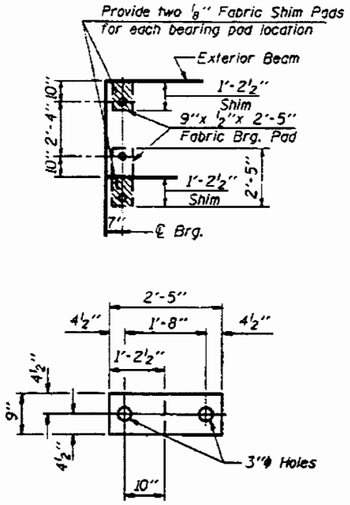

½" FABRIC BRG. PAD DETAILS

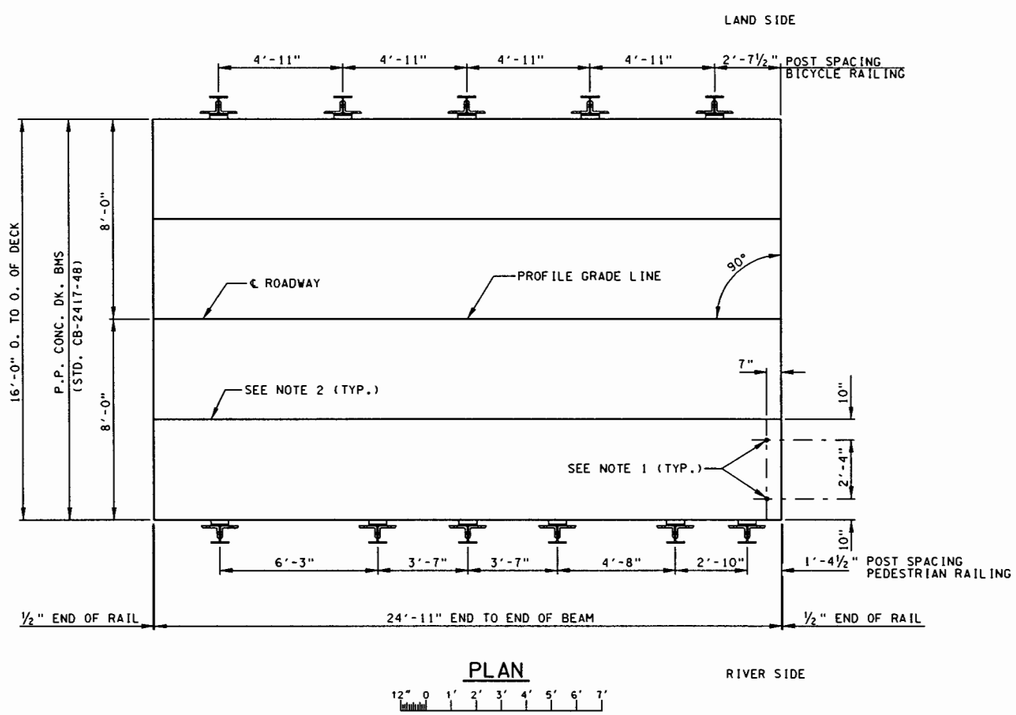

PLAN

NOTES

1. After beams have been erected, holes shall be drilled into substructure and anchor dowels placed. Dowel holes shall be filled with non-shrink grout to top of beam and allowed to cure min. 24 hrs. prior to grouting the shear keys.
2. Longitudinal keys shall be grouted.
3. Base drawing copied from Illinois Department of Transportation, Standard Plans, Volume I: Precast Prestressed Concrete Deck Beam Bridges, 1 Nov 1995.

P.P.C. DECK BEAM SUPERSTRUCTURE			
24' RDWY.	17" BMS.	25' SPAN	0° SKEW
STANDARD CS-2417-25			

US Army Corps of Engineers
Rock Island District

Symbol	Description	Date	Approved
△	AS CONSTRUCTED		
	Revisions		

ORIGINAL

Designed By: HD
Date: MAR 1999
Drawn By: RDG
Scale: AS SHOWN
Checked By: WM
Drawing Code: 1-L1-3-1/67
Reviewed By: RCA
Solicitation Number: DACW25-97-B-0032

U.S. ARMY ENGINEER DISTRICT
CORPS OF ENGINEERS
ROCK ISLAND, ILLINOIS

ILLINOIS WATERWAY
ENVIRONMENTAL MANAGEMENT PROGRAM
LA GRANGE POOL, MILE 124 TO 129.5
LAKE CHAUTAUQUA
OPERATIONS AND MAINTENANCE

BRIDGE
P.P.C. DECK BEAM SUPERSTRUCTURE

Sheet Reference Number:
S110
Sheet 37 of 84

02-MAR-2005 13:49
#mvrcds#c:\projects\MEP52\Old Manual - Use this one\mep52s110.dgn

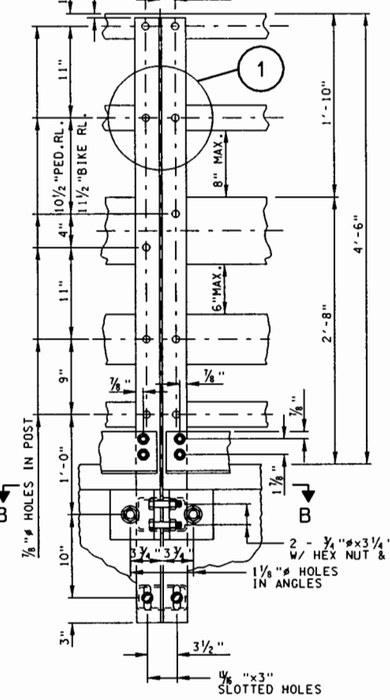

SECTION A-A

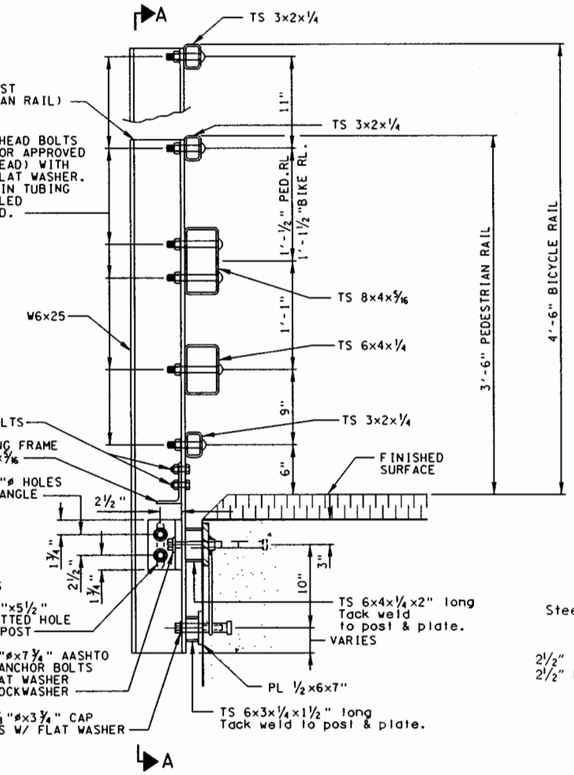

SECTION AT RAIL POST

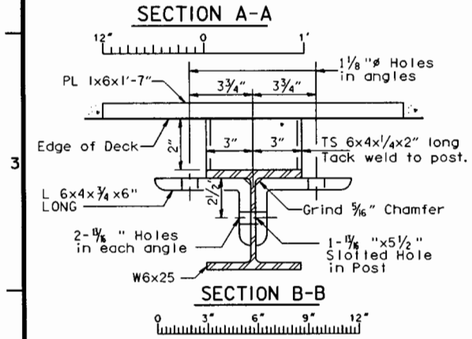

SECTION B-B

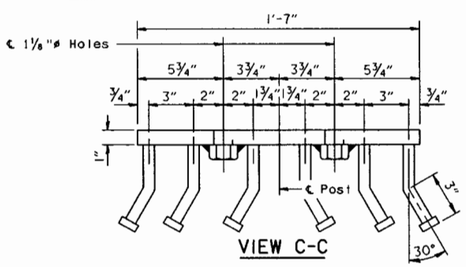

VIEW C-C

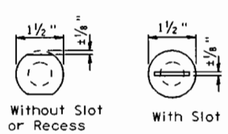

VIEW A-A

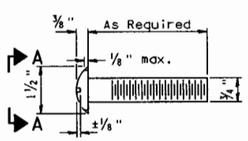

DETAIL OF ¾" ø ROUND HEAD BOLT

NO SCALE

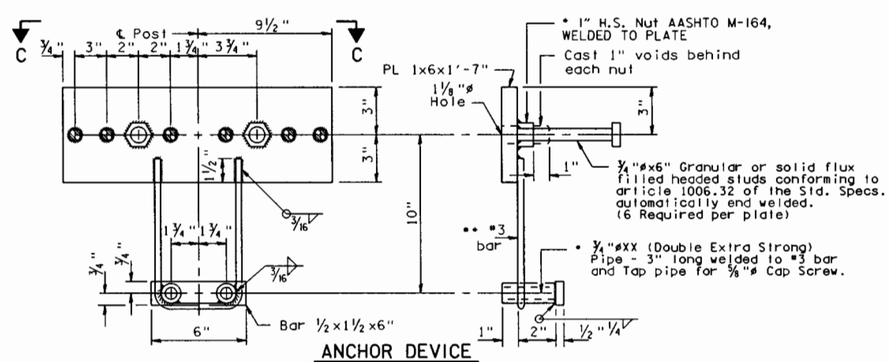

ANCHOR DEVICE

NO SCALE

* Threaded areas shall be plugged or blocked off during casting of beam. Galvanize after fabrication.

** Whenever the lower insert assemblies interfere with strand locations, the #3 bars shall be cut and adjusted in order to allow raising or lowering of the lower inserts. Maximum adjustment not to exceed ½".

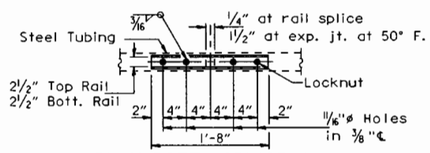

PLAN-BOTT. SPLICE ℄ TYPICAL

NO SCALE

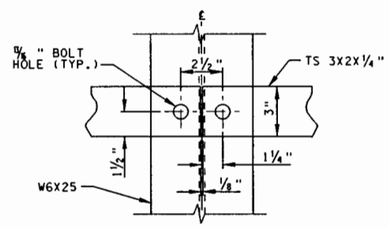

DETAIL - 3X2 RAIL CONNECTION (1)

NO SCALE

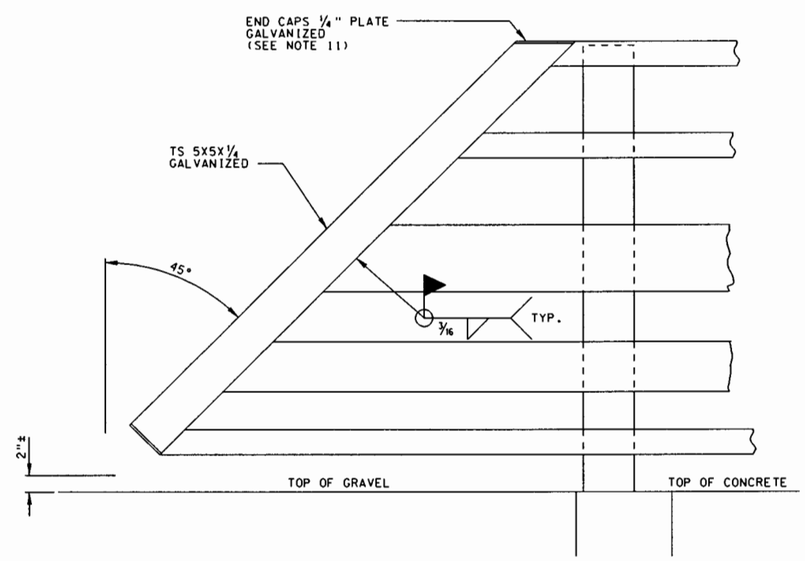

RAILING END DETAIL

12" 0 1'

NOTE: AFTER WELDING TOUCH UP WITH GALVANIZING PAINT.

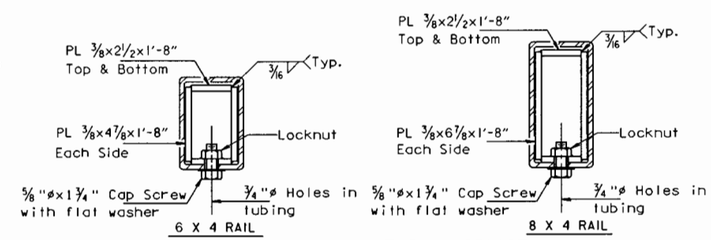

SECTIONS AT RAIL SPLICE

NO SCALE

NOTES

1. Base drawing copied from Illinois Department of Transportation, Standard Plans, Volume I: Precast Prestressed Concrete Deck Beam Bridges, 1 Nov 1995.
2. Hollow structural steel tubing shall conform to the requirements of ASTM designation A500 Grade B Structural Steel Tubing and shall meet the longitudinal CVN requirements of 15 ft-lbs at 0° F.
3. All other steel shapes and plates shall conform to the requirements of AASHTO M270 Grade 36 except posts and angles shall conform to AASHTO M270, Grade 50.
4. Bolts, cap screws, and nuts shall conform to the requirement of ASTM designation A307 except for high strength bolts, nuts and washers noted which shall conform to AASHTO M164.
5. All bolts, nuts, cap screws, washers and lock washers shall be galvanized in accordance with AASHTO M232.
6. All posts, railing, rail splices, anchor devices and angles shall be galvanized after shop fabrication in accordance with AASHTO M111 and ASTM A385. Galvanized rail shall not be painted.
7. All field drilled holes shall be coated with an approved zinc rich paint before erection.
8. The ¾"ø high strength bolts used to connect the 6 x 4 x ¾ angles to the post shall be tightened in accordance with Article 505.04(f)(3) of the Standard Specifications. The 1"ø high strength bolts connecting the angles to the concrete shall be tightened to a snug fit and given an additional ⅙ turn. The ⅝"ø cap screws in bottom of posts shall be tightened to a snug fit only.
9. The ½" x 6" x 7" plates that come in contact with concrete shall receive two coats of asphalt paint conforming to Section 1060.07 Type II or place ⅛" fabric bearing pads between the plates and concrete.
10. The maximum allowable rail post spacing shall be 6'-3".
11. Weld end caps with ¼" continuous bead and dress smooth.

US Army Corps of Engineers Rock Island District

Symbol	Description	Date	Approved
	Revisions		

Designed By: HD
Date: MAR 1999
Drawn By: RDG
Scale: AS SHOWN
Checked By: WM
Drawing Code: 1-L1-3-1/67
Reviewed By: RCA
Solicitation Number: DACW25-97-B-0032

U.S. ARMY ENGINEER DISTRICT CORPS OF ENGINEERS ROCK ISLAND, ILLINOIS

ILLINOIS WATERWAY
ENVIRONMENTAL MANAGEMENT PROGRAM
LA GRANGE POOL, MILE 124 TO 129.5
LAKE CHAUTAUQUA
OPERATIONS AND MAINTENANCE

STEEL BRIDGE RAIL TYPE SM

Sheet Reference Number: **S120**

Sheet 38 of 84

02-MAR-2005 13:49
wmcrdf$scada$projects$PS2KOM manual - Use this ad$mp52a120.dgn

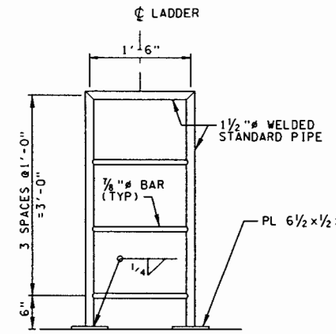

ELEVATION
LADDER EXTENSION
(MAKE 1)
(GALVANIZE AFTER FABRICATION)

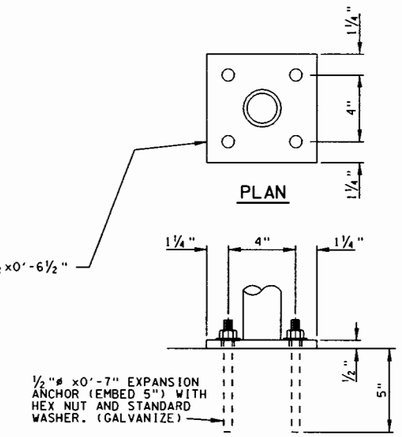

ELEVATION
ANCHOR PLATE
(MAKE 2)
(GALVANIZE AFTER FABRICATION)

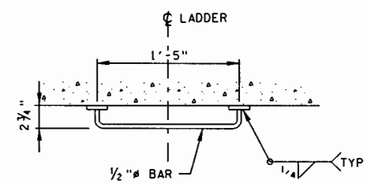

PLAN
WALL MOUNTED HAND RUNGS
(MAKE 4)
(GALVANIZE AFTER FABRICATION)

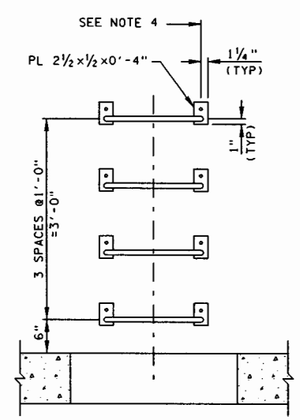

SECTION A
S201 S201

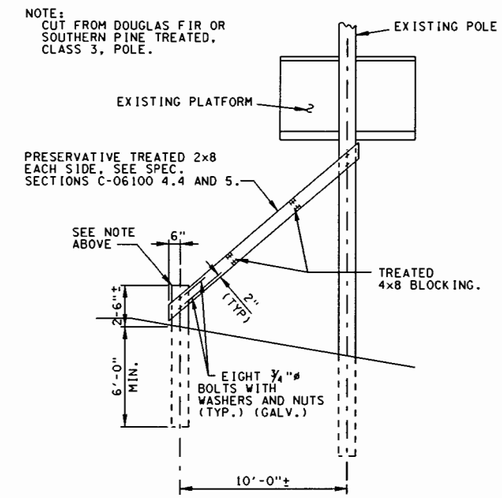

PLATFORM BRACE DETAIL
(MAKE 2)

NOTES:

1. ANCHOR BOLTS SHALL BE ½" DIA. HAVE AT LEAST 5 INCH EMBEDMENT, 4000 POUND ULTIMATE PULLOUT AND 6000 POUND ULTIMATE SHEAR STRENGTH. ALL ANCHOR BOLTS AND FASTENERS SHALL BE GALVANIZED.
2. WELD ALL PIPE JOINTS WITH CONTINUOUS BEAD, SIZE EQUAL TO PIPE WALL THICKNESS, AND DRESS SMOOTH.
3. GALVANIZE HANDRAIL AFTER FABRICATION.
4. CONTRACTOR SHALL VERIFY THAT THE WALL-MOUNTED HAND RUNGS WILL NOT INTERFERE WITH THE ACCESS COVER BELOW. IF NECESSARY, THE 2¾" RUNG DEPTH MAY BE REDUCED SLIGHTLY TO ENSURE CLEARANCE BETWEEN THE RUNGS AND ACCESS COVER.

US Army Corps of Engineers
Rock Island District

Symbol	Description	Date	Approved

Revisions

Designed By: KEW
Date: MAR 1999
Drawn By: DGP
Scale: AS SHOWN
Checked By: WM
Drawing Code: 1-L1-3-1/67
Reviewed By: RCA
Solicitation Number: DACW25-97-B-0032

U.S. ARMY ENGINEER DISTRICT
CORPS OF ENGINEERS
ROCK ISLAND, ILLINOIS

ILLINOIS WATERWAY
ENVIRONMENTAL MANAGEMENT PROGRAM
LA GRANGE POOL, MILE 124 TO 129.5
LAKE CHAUTAUQUA
OPERATIONS AND MAINTENANCE

PUMP STATION AND DETAILS

Sheet Reference Number:
S130
Sheet 39 of 84

02-MAR-2005 13:49
wmorris@d00dwp0jectw@PS2:ROM Manual - Use this ordwp52s130.dgn

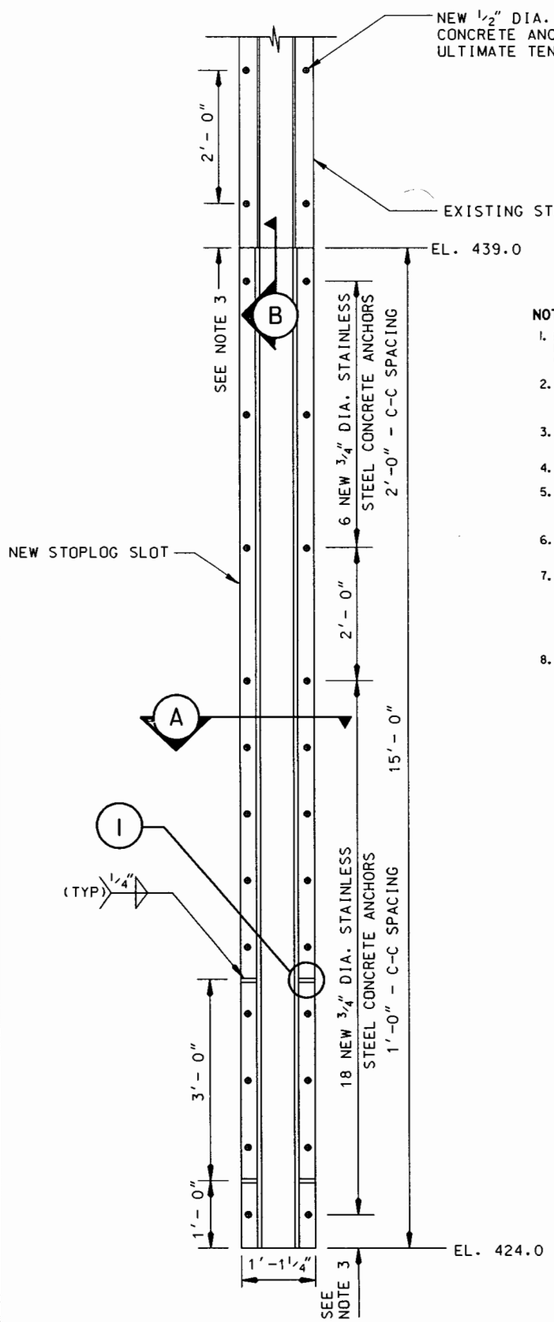

FRONT VIEW - STOPLOG SLOT

NO SCALE

NOTES:

1. EXISTING STOPLOG SLOTS SHALL BE REMOVED. REPLACE BOTTOM 15 FT. WITH NEW STOPLOG SLOT SHOWN. CUT 10 FT OF THE EXISTING STOPLOG AND PLACE AT TOP.
2. TOP OF NEW STOPLOG SLOT SHALL BE TAPERED TO MATCH EXISTING STOPLOG SLOT AS SHOWN IN STOPLOG SLOT JOINT SECTION.
3. FIELD ADJUST SPACING TO PROVIDE CLEARANCE BETWEEN NEW BOLTS AND EXISTING BOLTS 3" MIN. 6" MAX.
4. 2 STOPLOG SLOTS ARE REQUIRED IN EACH OF 3 GATEWELLS.
5. THE CONTRACTOR SHALL DEWATER THE GATEWELLS OR PERFORM UNDERWATER WORK. THE CONTRACTOR SHALL SUBMIT HIS PLAN TO ACCOMPLISH THE WORK.
6. THE CONTRACTOR MAY INSTALL THE UPPER LAKE SLOTS WHEN THE UPPER LAKE IS DEWATERED.
7. THE USFWS NORMALLY DEWATERS THE LOWER LAKE EACH YEAR DEPENDING ON RIVER LEVELS. THE USFWS DEWATERING OPERATION SHALL NOT BE INTERFERED WITH AND THE CONTRACTOR SHALL MEET ALL USFWS REQUIREMENTS. WRITTEN COORDINATION WITH USFWS WILL BE REQUIRED. ADDITIONAL CONTRACTOR DEWATERING IS ANTICIPATED TO LOWER WATER LEVELS BELOW THE SLOTS.
8. WATER LEVELS AT THE RIVER SIDE STOP LOG SLOTS ARE CONTROLLED BY WATER LEVELS IN THE RIVER NAVIGATION CHANNEL. THE CONTRACTOR MAY NOT BLOCK THE TRASH RACK; HOWEVER, THE TRASH RACK MAY BE TEMPORARILY REMOVED AND THE 5' X 5' BOX CULVERT OPENING MAY BE TEMPORARILY PLUGGED. THE DETAILS AND DESIGN OF THIS SYSTEM IS THE CONTRACTOR'S RESPONSIBILITY AND SHALL BE SUBMITTED TO THE CONTRACTING OFFICER FOR REVIEW AND APPROVAL.

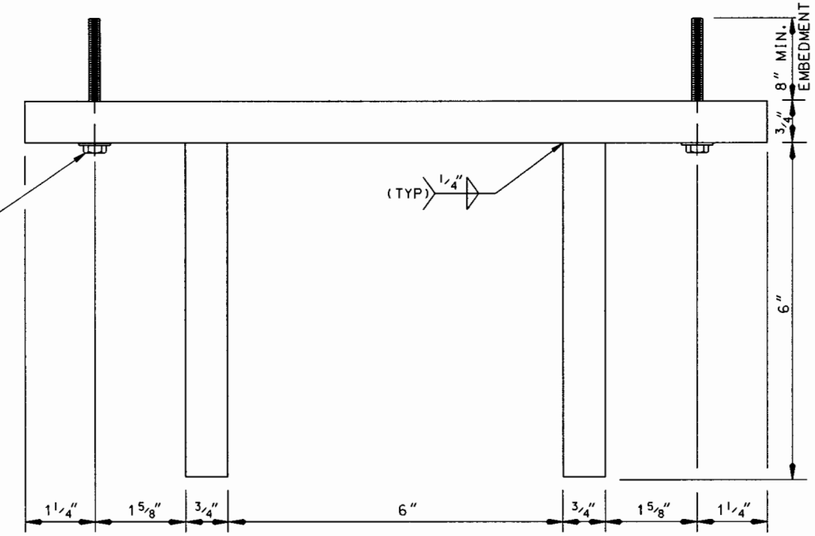

A SECTION - STOPLOG SLOT

NO SCALE

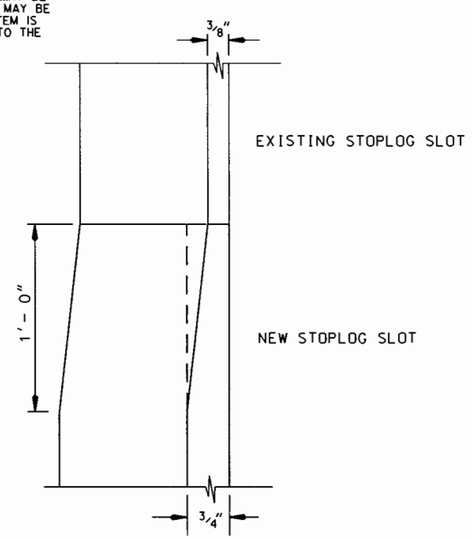

B SECTION - STOPLOG SLOT JOINT

NO SCALE

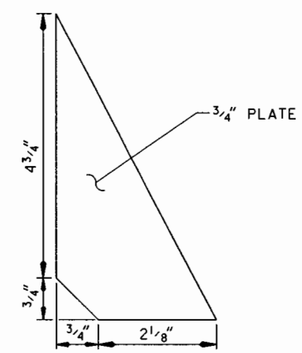

I DETAIL- STIFFNER (24 REQUIRED)

NO SCALE

US Army Corps of Engineers
Rock Island District

Symbol	Description	Date	Approved
1	ADD. #1 - THIS SHEET ADDED TO SET.	8/26/97	MBC-RCA

Revisions

Designed By: MBC
Drawn By: CAB
Checked By: ERK
Reviewed By: RCA
Date: MAR 1999
Scale: AS SHOWN
Drawing Code: 1-1-1-3-1/67
Solicitation Number: DACW25-97-B-0032

U.S. ARMY ENGINEER DISTRICT
CORPS OF ENGINEERS
ROCK ISLAND, ILLINOIS

ILLINOIS WATERWAY
ENVIRONMENTAL MANAGEMENT PROGRAM
LA GRANGE POOL - MILE 124 TO 129.5
LAKE CHAUTAUQUA
OPERATIONS AND MAINTENANCE

PUMP STATION STOPLOG SLOT DETAILS

Sheet Reference Number:
S140
Sheet 40 of 84

02-MAR-2005 13:50
emw/dfs&cadd&projects&EPS2&OAM Manual - Use this on&eps52s140.dgn

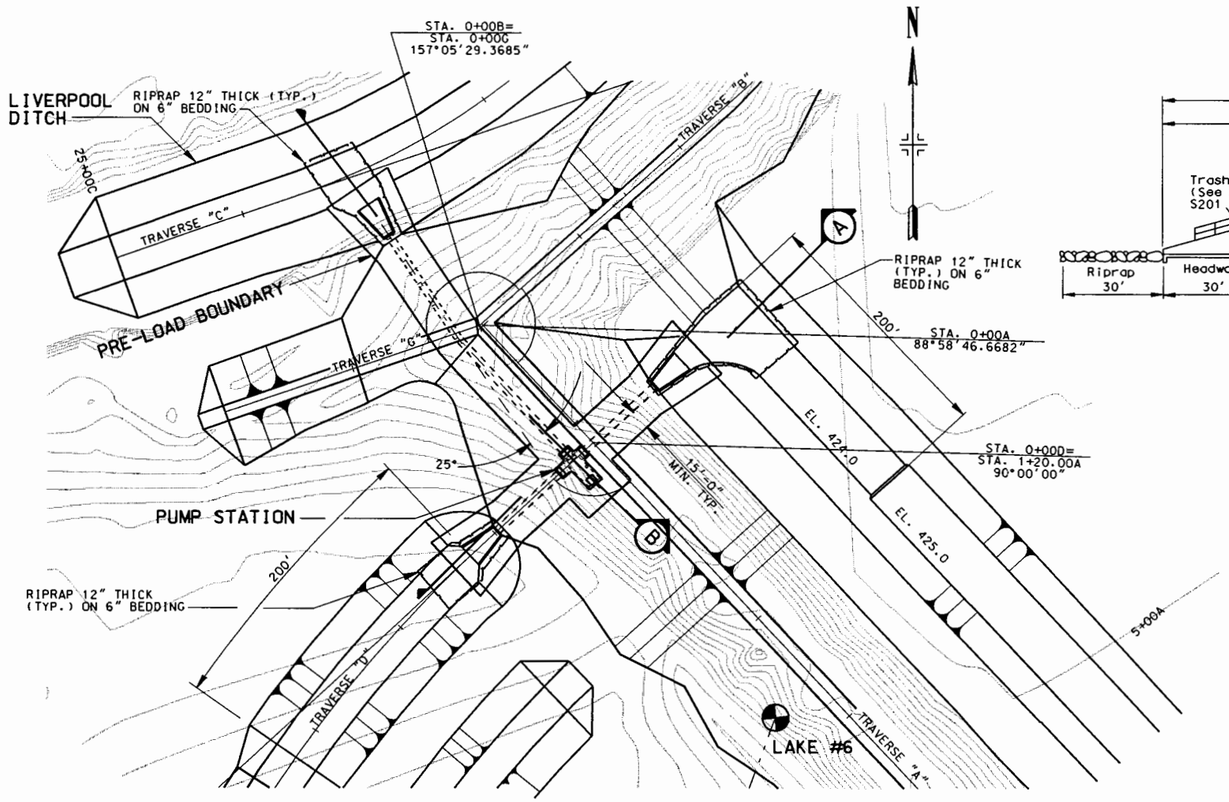

PUMP STATION SITE PLAN

50 25 0 50 100FT

SCALE: 1"= 50'

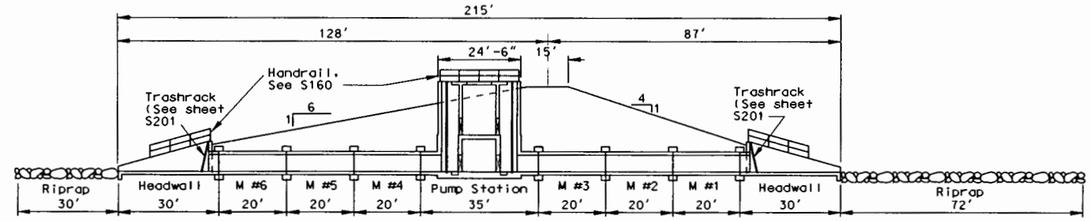

SECTION A

SCALE: 1" = 20'

20' 0 20'

NOTES:

1. CONTRACTOR SHALL PRELOAD PUMP STATION SITE FOR 6 MONTHS WITH UNCOMPACTED EMBANKMENT. DEPTH OF PRE-LOAD SHALL BE 4' ABOVE FINAL GRADE.
2. CONTRACTOR SHALL BACKFILL WITH COMPACTED CLAY EMBANKMENT UP TO FINAL GRADE WITHIN LIMITS OF PRELOAD BOUNDARY.
3. CONTRACTOR SHALL BUILD PUMP STATION AS SOON AS ACCESS PERMITS AND PRELOAD IS COMPLETE.
4. ⚠ CONTOURS NOT SHOWN IN UPPER AND LOWER LAKE, LIVERPOOL DITCH, AND MEYERS DITCH.
5. ⚠ CONTOUR INTERVAL IS 2 FEET.

HORIZONTAL TRAVERSE CONTROL POSITION
LAKE #6: 5/8" PIN WITH BRASS CAP
STA. 3+63.46513A 41.52654' RIGHT

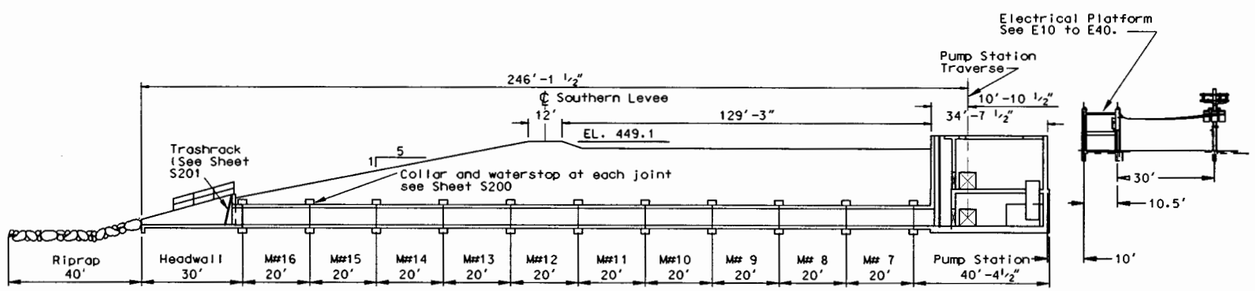

SECTION B

SCALE: 1" = 20'

20' 0 20'

US Army Corps of Engineers
Rock Island District

Symbol	Description	Date	Approved
	AS CONSTRUCTED	17 DEC 98	DRC/JJC
1	AMD. #1 MODIFIED CONTOURS	18 AUG 92	

Revisions

Designed By: DRC		Date: MAR 1999	
Drawn By: JRK/TPD/HDG		Scale: AS SHOWN	
Checked By: DLL		Drawing Code: 1-L1-3-1/67	
Reviewed By: DJH		Solicitation Number: DACW25-97-B-0032	

U.S. ARMY ENGINEER DISTRICT
CORPS OF ENGINEERS
ROCK ISLAND, ILLINOIS

ILLINOIS WATERWAY
ENVIRONMENTAL MANAGEMENT PROGRAM
LA GRANGE POOL, MILE 124 TO 129.5
LAKE CHAUTAUQUA
OPERATIONS AND MAINTENANCE

PUMP STATION STRUCTURAL SITE PLAN

Sheet Reference Number:
S150
Sheet 41 of 84

02-MAR-2005 13:50
wwwrdf1&0000&Projects&F92&DM manual - Use this one&p52&150.dgn

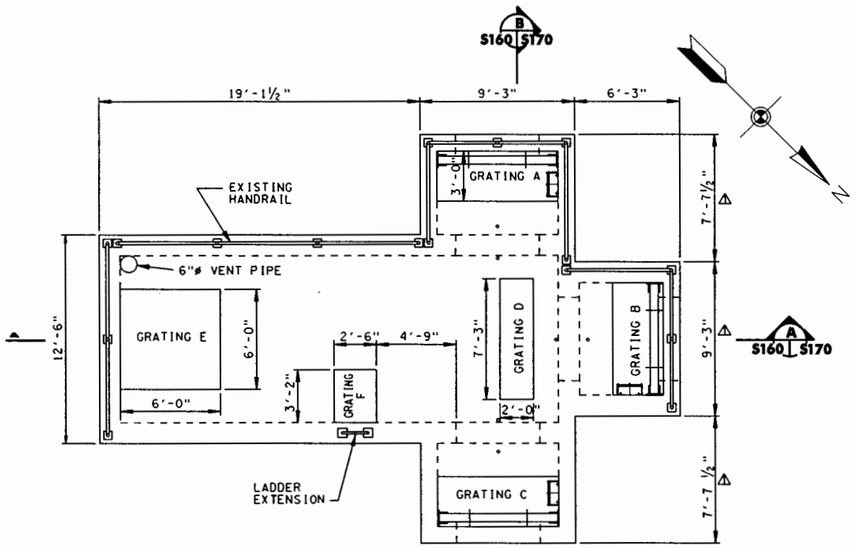

PLAN

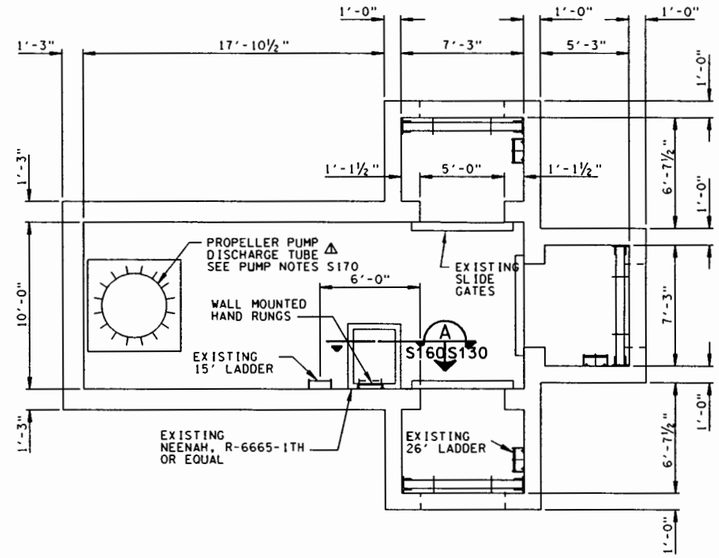

SECTION AT EL. 437.5

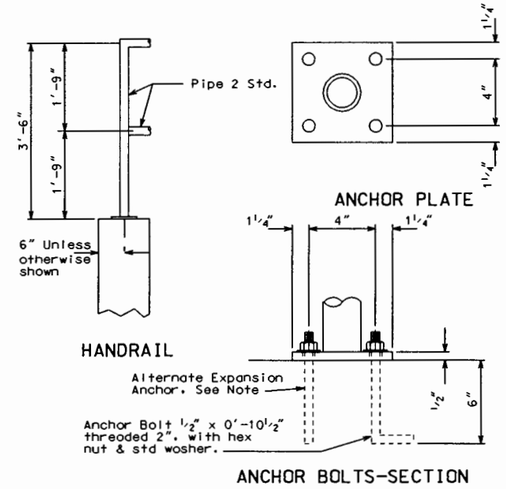

NOTES:

1. Anchor bolts-either embedded bolts or expansion bolts may be used. Expansion bolts shall be 1/2" dia., have atleast 5 inch embedment, 4000 lb. ultimate pullout and 6000 lb. ultimate shear. All anchor bolts and fasteners to be galvanized.
2. Weld all pipe joints with continuous bead, size equal to pipe wall thickness, and dress smooth.
3. Handrail to be galvanized after fabrication.

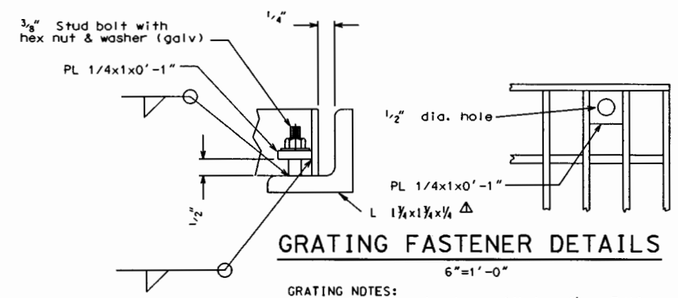

GRATING FASTENER DETAILS

6"=1'-0"

REFERENCE:
1. For Ladder Details, see Sheet S-3.

GRATING TABLE

LOCATION	A	B	NO. OF SECTIONS
Grating A	7'-3"	3'-0"	3
Grating B	7'-3"	3'-0"	3
Grating C	7'-3"	3'-0"	3
Grating D	7'-3"	2'-0"	2
Grating E*	6'-0"	6'-0"	2
Grating F	3'-2"	2'-6"	2

*1/8" raised pattern floor plate to match and welded to grating. Notch corners for access to fasteners. Provide two handles for each grating.

GRATING NOTES:
Bond ends of bearing bars with bar 1½ x 3/16.
Bearing bars are 1½ x 3/16 on 1 3/16 centers.
Cross bars are at 4".
Provide fastener at each corner as shown.
Grating is to be serrated type.
The frame and grating are to be steel hot dip galvanized in accordance with ASTM A-123, after fabrication.
Bearing bars to be in B direction.
All gratings for an opening will be approx. the same size.

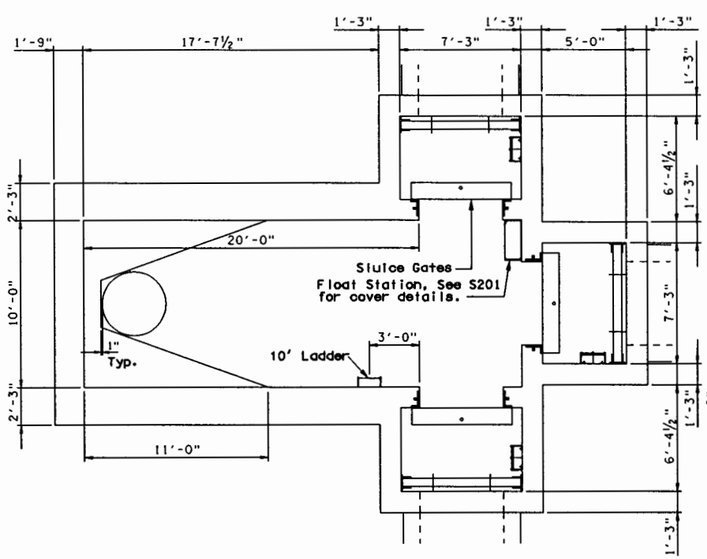

SECTION AT EL. 427

SCALE: 1/4" = 1'-0"

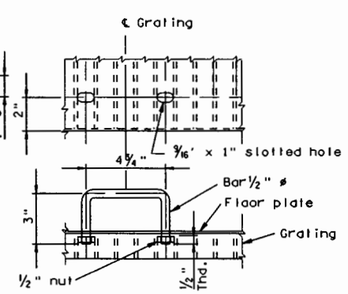

HANDLE DETAIL
GRATING E

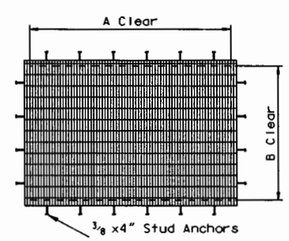

GRATING AND FRAME DETAILS
NO SCALE

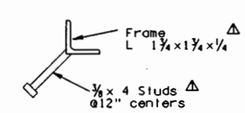

STUD DETAIL
NO SCALE

US Army Corps of Engineers
Rock Island District

Symbol	Description	Date	Approved
1	AS CONSTRUCTED Amd. #1 - Minor changes and clarifications	17 DEC 98 5 FEB 99	DRC/JJC RCA

Revisions

Designed By: MJW
Dwn By: JRK
Checked By: TJW
Reviewed By: RCA
Date: MAR 1999
Scale: AS SHOWN
Drawing Code: 1-L1-3-1/67
Solicitation Number: DACW25-97-B-0032

U.S. ARMY ENGINEER DISTRICT
CORPS OF ENGINEERS
ROCK ISLAND, ILLINOIS

ILLINOIS WATERWAY
ENVIRONMENTAL MANAGEMENT PROGRAM
LA GRANGE POOL, MILE 124 TO 129.5
LAKE CHAUTAUQUA
OPERATIONS AND MAINTENANCE

PUMP STATION ARCHITECTURAL DETAILS I

Sheet Reference Number:
S160
Sheet 42 of 84

02-MAR-2005 13:51
wwwroot$WCDOCS$Projects$EPS2$OM Manual - Use this ordwgs52s160.dgn

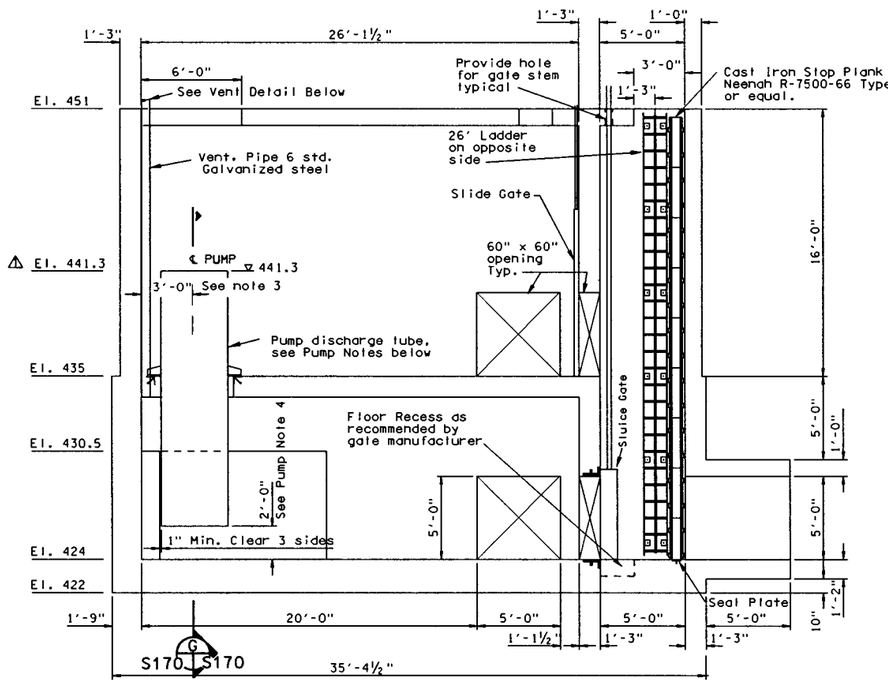

SECTION A
S160 S170

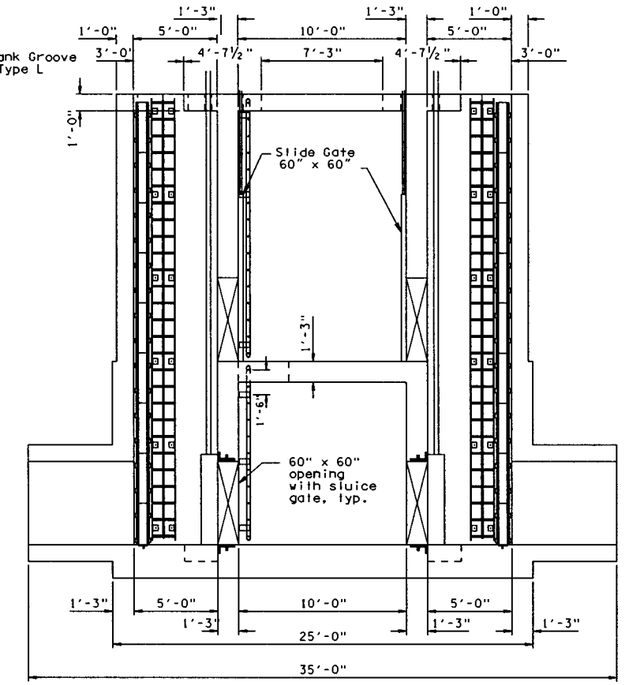

SECTION B
S160 S170

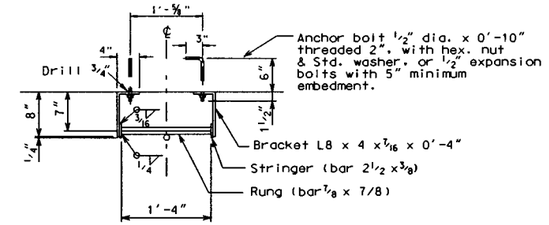

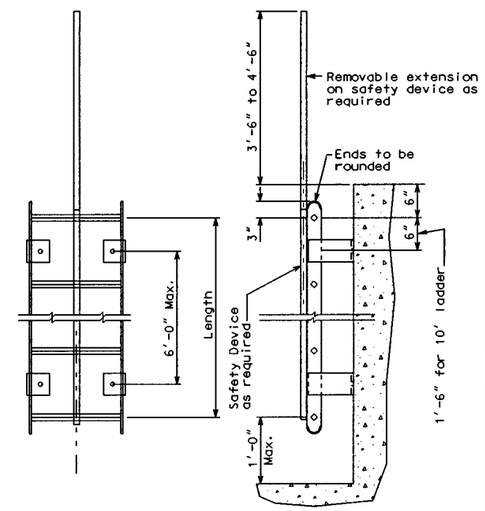

LADDER DETAIL

SCALE: 1" = 1'-0"

PUMP STATION LADDER TABLE

LOCATION	LENGTH	QUANTITY	SAFETY DEVICE & EXTENSION
GATEWELLS	26'	3	YES
U PUMP BAY	15'	1	NO
L PUMP BAY	10'	1	NO

SLUICE GATE NOTES:
1. SEATING HEAD=25'. UNSEATING HEAD=15'.
2. ALL SLUICE GATES SHALL BE CAST IRON. FLATBACK. FLUSH BOTTOM. RISING STEM. WITH TOP AND SIDE WEDGES AND BRONZE LIFTING NUTS.
3. ALL WALL THIMBLES SHALL BE "F" TYPE WITH SQUARE OPENINGS AND SQUARE FLANGES.
4. PEDESTAL LIFTS SHALL BE CRANK OPERATED HAVING 25 POUND MAXIMUM CRANK PULL AND SHALL BE OF THE INCLOSED TYPE.
5. STEMS SHALL BE FABRICATED OF STAINLESS STEEL.
6. PEDESTAL LIFTS SHALL HAVE GALVANIZED STEEL STEM COVERS.
7. LOCATE PEDESTAL LIFTS AND ACCESSORIES FROM DIMENSIONS FURNISHED BY THE GATE MANUFACTURER.
8. ALL ANCHOR BOLTS FOR GATES AND ACCESSORIES SHALL BE SUPPLIED BY GATE MANUFACTURER.
9. PROVIDE STEM GUIDES AS REQUIRED.

SLIDE GATE NOTES:
1. SEATING HEAD =10', UNSEATING HEAD =12'.
2. ALL SLIDE GATES SHALL BE FABRICATED FROM STEEL. EMBEDDED FRAME. FLATBACK. FLUSH BOTTOM. RISING STEM. NON SELF-CONTAINED.
3. STEMS SHALL BE STAINLESS STEEL.
4. PEDESTAL LIFTS SHALL HAVE GALVANIZED STEEL STEM COVERS.
5. LOCATE PEDESTAL LIFTS AND ACCESSORIES FROM DIMENSIONS FURNISHED BY THE GATE MANUFACTURER.
6. ALL ANCHOR BOLTS FOR GATES AND ACCESSORIES SHALL BE SUPPLIED BY GATE MANUFACTURER.
7. PROVIDE STEM GUIDES AS REQUIRED.

PUMP NOTES:
1. SEE SPECIFICATIONS FOR PUMP REQUIREMENTS.
2. DISCHARGE TUBE SUPPORT PLATE AND GUSSETS SHALL BE DETAILED AND FABRICATED BY PUMP MANUFACTURER.
3. ADJUST LOCATION AND SIZE OF PUMP TUBE OPENING IN SLAB. IF NECESSARY TO FIT ACTUAL SELECTED PUMP.
4. ADJUST DISCHARGE TUBE/SUMP FLOOR CLEARANCE AS RECOMMENDED BY PUMP MANUFACTURER.
5. INSTALL SUPPORTS (NOT SHOWN) NEAR PUMP IMPELLER AND AT OTHER LOCATIONS DEEMED NECESSARY. AS DETAILED AND FABRICATED BY PUMP MANUFACTURER. LATERAL SUPPORTS SHALL BE DETACHABLE FROM PIPING FOR EASE OF INSTALLATION.
6. MOTOR CABLE PENETRATIONS MAYBE LOCATED AT ANY ANGLE TO FACILITATE INSTALLATION AND MAINTENACE.
7. SEE ELECTRICALSHEETS E-1D THROUGH E-4D FOR PUMP ELECTRICAL DETAILS.

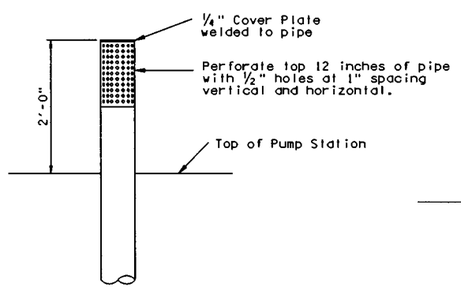

VENT PIPE DETAIL

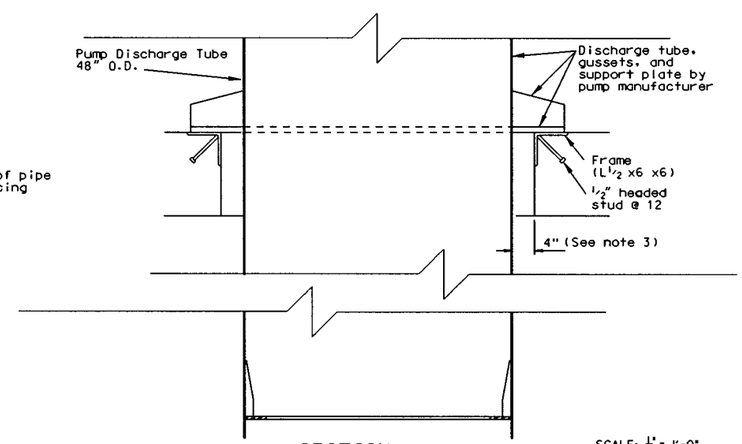

SECTION G
S170 S170

SCALE: 1" = 1'-0"

SCALE: ¼" = 1'-0"

US Army Corps of Engineers
Rock Island District

Symbol	Description	Date	Approved
1	REVISED AS CONSTRUCTED	TLKC 98	DRC/AJC

Revisions

U.S. ARMY ENGINEER DISTRICT
CORPS OF ENGINEERS
ROCK ISLAND, ILLINOIS

Designed By: MJW	Date: MAR 1999		
Drawn By: JRK	Scale: AS SHOWN		
Checked By: TJW	Drawing Code: 1-L1-3-1/67		
Reviewed By: RCA	Solicitation Number: DACW25-97-B-0032		

ILLINOIS WATERWAY
ENVIRONMENTAL MANAGEMENT PROGRAM
LA GRANGE POOL, MILE 124 TO 129.5
LAKE CHAUTAUQUA
OPERATIONS AND MAINTENANCE

PUMP STATION ARCHITECTURAL DETAILS II

Sheet Reference Number:
S170
Sheet 43 of 84

02-MAR-2005 13:52
Smart drive=c:\projects\CPS2\CAD Manual - Use this only on 552s170.dgn

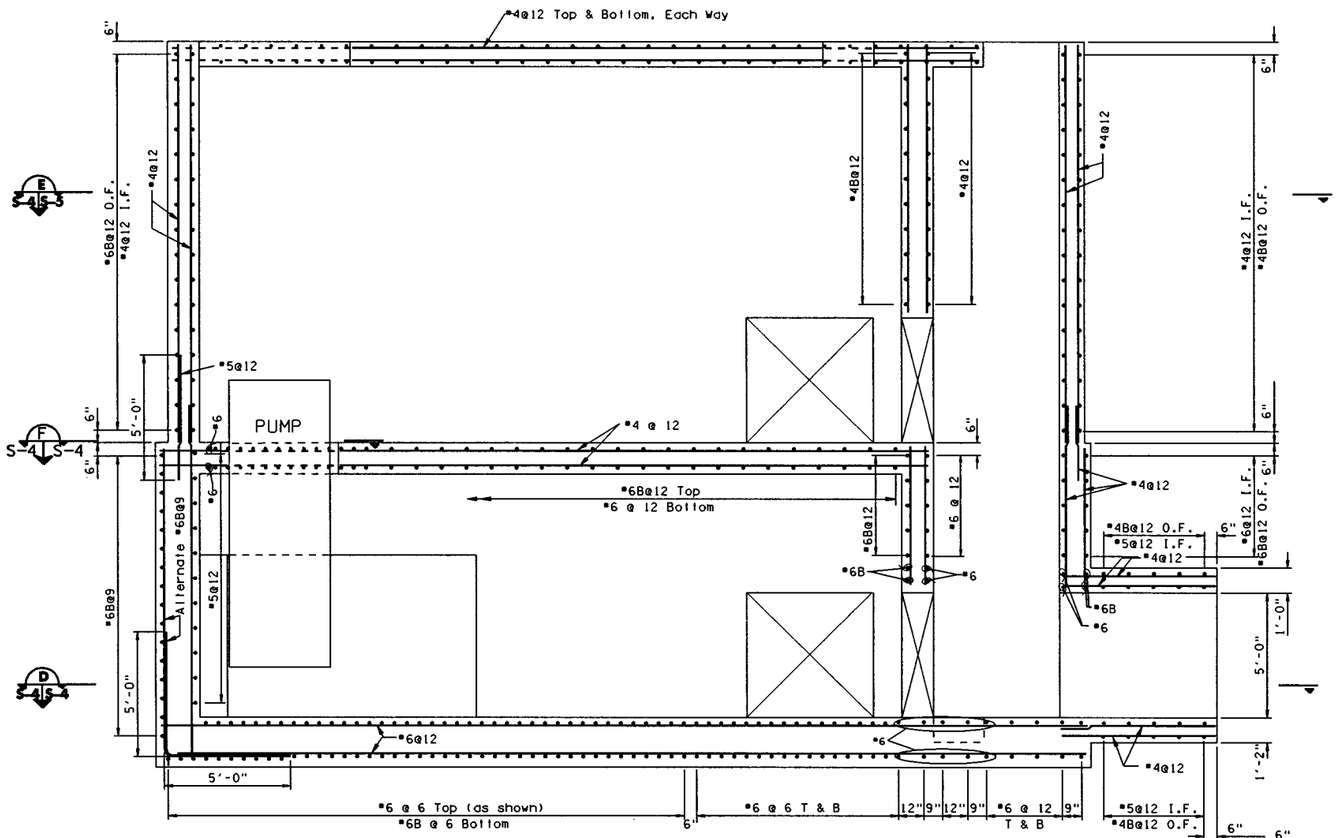

SECTION B S-5 S-4

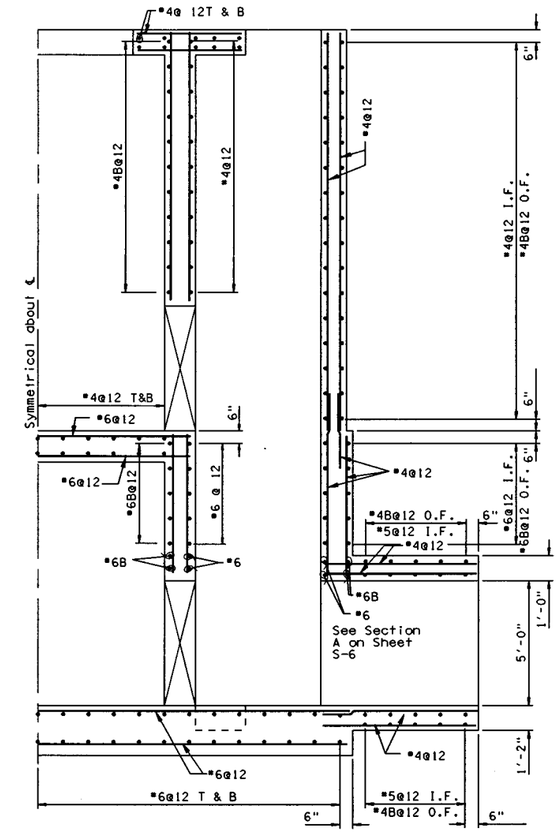

SECTION C S-5 S-4

REFERENCE:
For ladders, stoplog slots and seal plates see S-3.

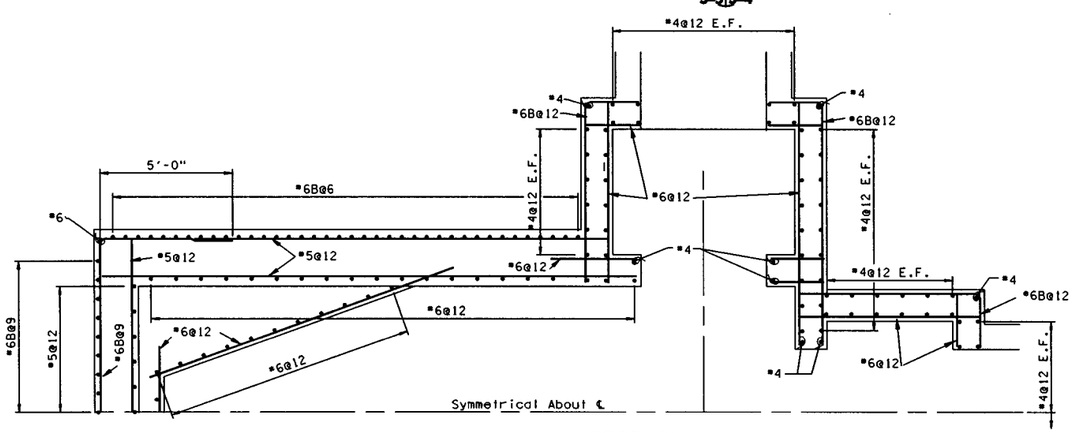

SECTION D S-4 S-4

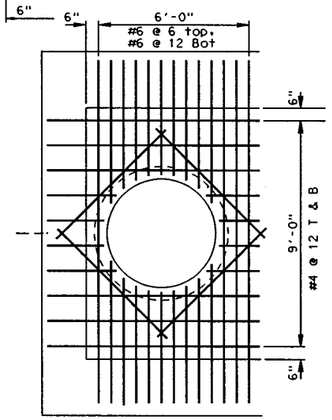

SECTION F S-4 S-4

SCALE: 1/8" = 1'-0"

US Army Corps of Engineers
Rock Island District

Symbol	Description	Date	Approved
	AS CONSTRUCTED	11 DEC 98	DRC/JJC

Revisions

Designed By: DRC
Date: MAR 1999
Drawn By:
Scale: AS SHOWN
Checked By:
Drawing Code: 1-L1-3-1/67
Reviewed By: JJC
Solicitation Number: DACW25-97-B-0032

U.S. ARMY ENGINEER DISTRICT
CORPS OF ENGINEERS
ROCK ISLAND, ILLINOIS

ILLINOIS WATERWAY
ENVIRONMENTAL MANAGEMENT PROGRAM
LA GRANGE POOL - MILE 124 TO 129.5
OPERATIONS AND MAINTENANCE

PUMP STATION REINFORCING I

Sheet Reference Number:
S180
Sheet 44 of 84

02-Aug-2005 14:47
mvrd1ecodsdsp:0jbc19eEP92:DGN Manual - Use this ordwg52s180.dgn

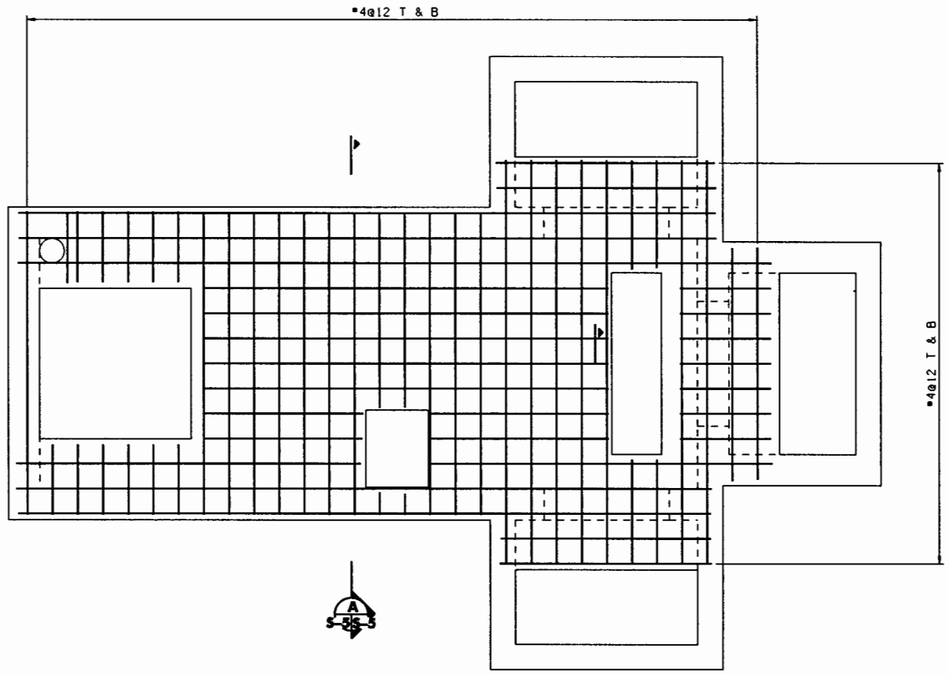

PLAN

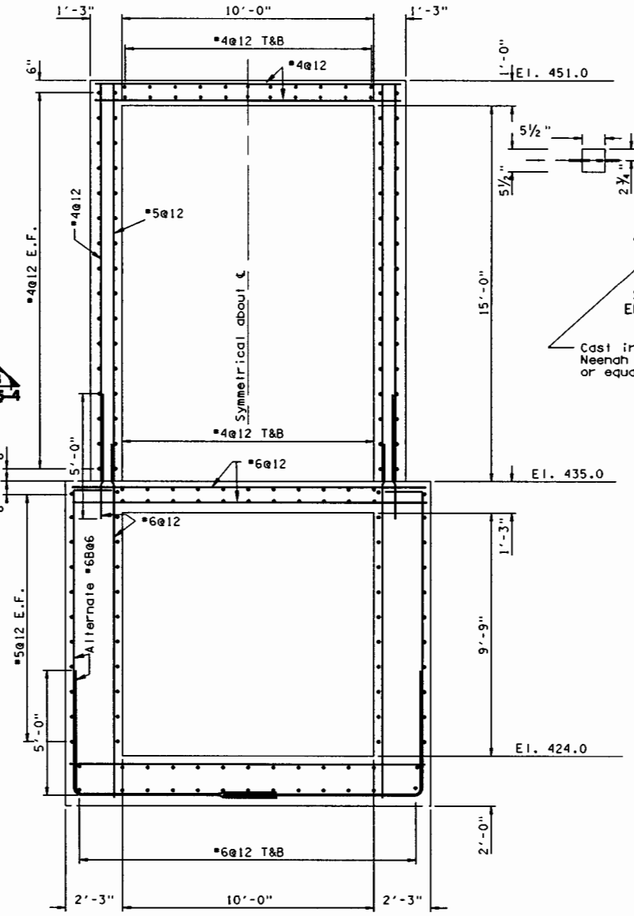

SECTION

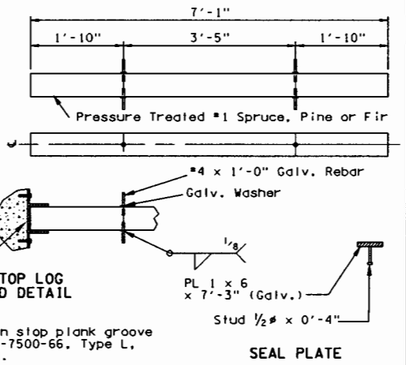

STOP LOG

MAKE 35

SCALE: ¾" = 1'-0"

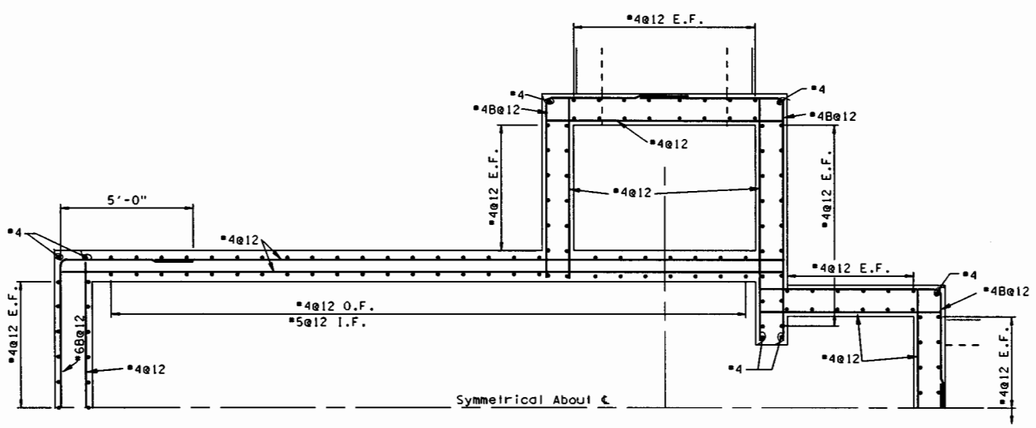

SECTION

Reference:
For ladders, stop log slots, and seal plates, see dwg. S-3.

SCALE: ⅜" = 1'-0"

US Army Corps of Engineers
Rock Island District

Symbol	Description	Date	Approved
	AS CONSTRUCTED	11 DEC 98	DRC/JJC

Revisions

Designed By: DRC
Drawn By:
Checked By:
Reviewed By: JJC
Date: MAR 1999
Scale: AS SHOWN
Drawing Code: 1-L1-3-1/67
Solicitation Number: DACW25-97-B-0032

U.S. ARMY ENGINEER DISTRICT
CORPS OF ENGINEERS
ROCK ISLAND, ILLINOIS

ILLINOIS WATERWAY
ENVIRONMENTAL MANAGEMENT PROGRAM
LA GRANGE POOL, MILE 124 TO 129.5
LAKE CHAUTAUQUA
OPERATIONS AND MAINTENANCE

PUMP STATION REINFORCING II

Sheet Reference Number:
S190
Sheet 45 of 84

02-MAR-2005 14:48
mmm/drts/ecodMProjects/MEP52/dgn Manual - Use this onlmp52s190.dgn

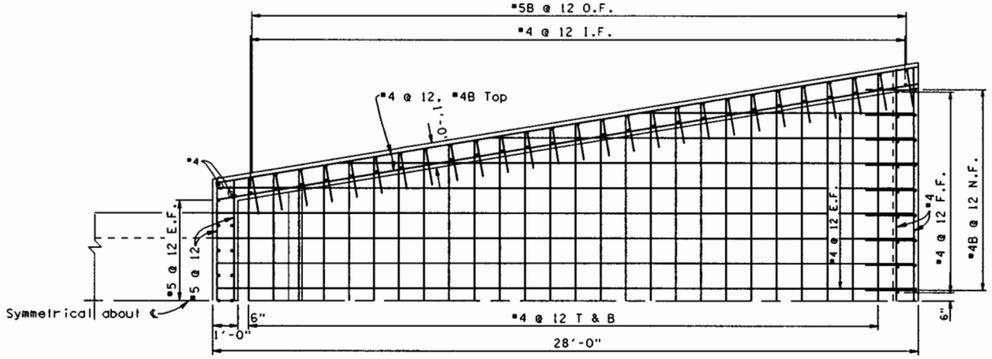

PLAN

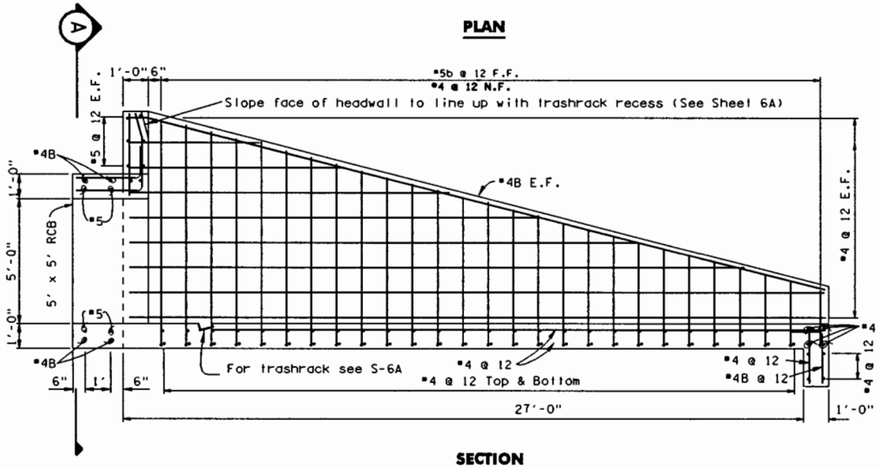

SECTION

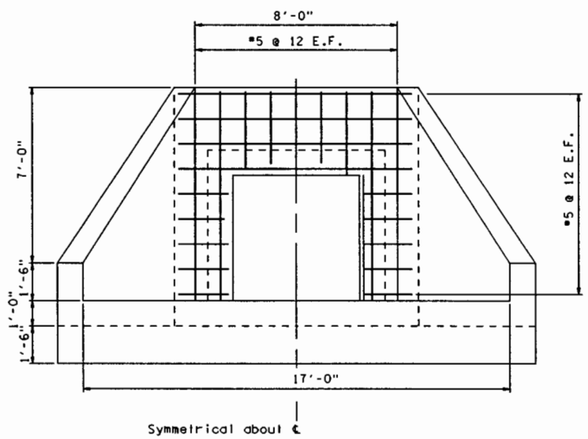

ELEVATION

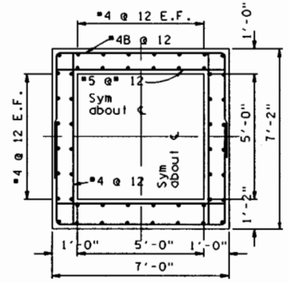

SECTION A

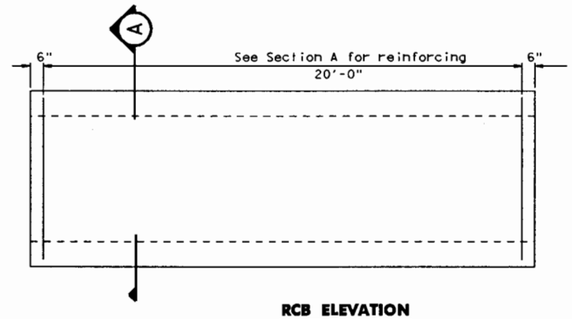

RCB ELEVATION

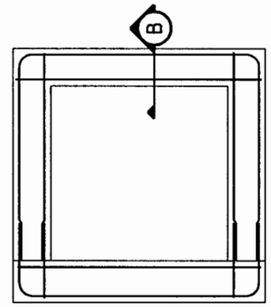

ELEVATION-CONNECTING COLLAR

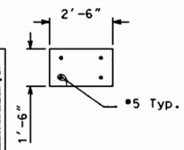

SECTION B

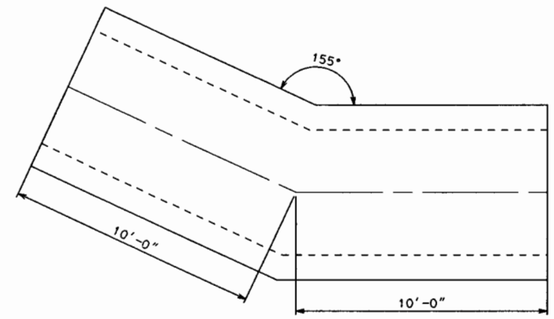

CORNER MONOLITH 12

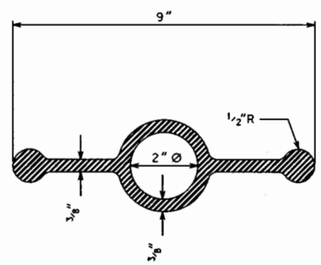

WATERSTOP DETAIL

PLACE ALL AROUND ALL PIPE JOINTS

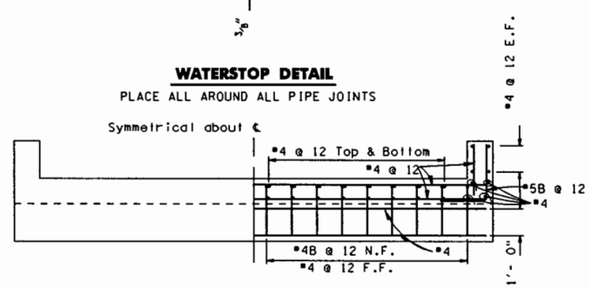

END ELEVATION

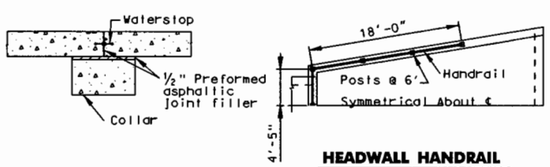

HEADWALL HANDRAIL

SCALE: 1/8" = 1'-0"

12" 0 5' 10' 15'

SCALE: 3/8" = 1'-0"

12" 0 2' 4' 6'

US Army Corps of Engineers
Rock Island District

Symbol	Description	Date	Approved

Revisions

AS CONSTRUCTED

TI DRC 98 DRC/JJC

Designed By: DRC
Date: MAR 1999
Drawn By:
Scale: AS SHOWN
Checked By:
Drawing Code: 1-L1-3-1/67
Reviewed By: JJC
Solicitation Number: DACW25-97-B-0032

U.S. ARMY ENGINEER DISTRICT
CORPS OF ENGINEERS
ROCK ISLAND, ILLINOIS

ILLINOIS WATERWAY
ENVIRONMENTAL MANAGEMENT PROGRAM
LA GRANGE POOL, MILE 124 TO 129.5
LAKE CHAUTAUQUA
OPERATIONS AND MAINTENANCE

PUMP STATION
BOX CULVERT & HEADWALL

Sheet Reference Number:
S200
Sheet 46 of 84

02-MAR-2005 14:48
wmurdfs@coe@projects#EP52-Odm Manual - Use this onlep52s200.dgn

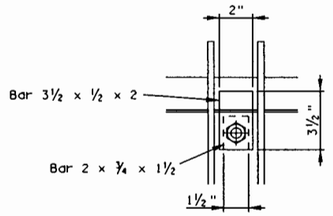

CLIP DETAIL

SCALE: 3" = 1'-0"

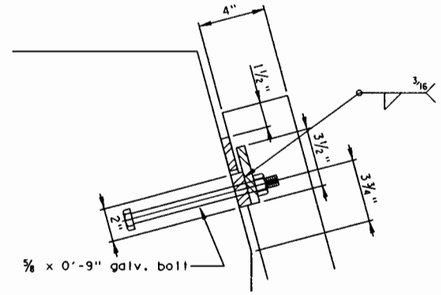

SECTION THRU CLIP

SCALE: 3" = 1'-0"

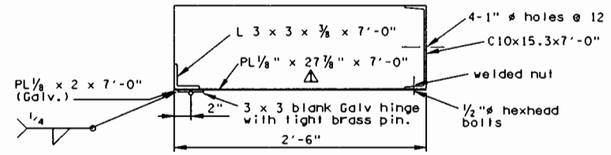

PLAN

SCALE: 1½" = 1'-0"

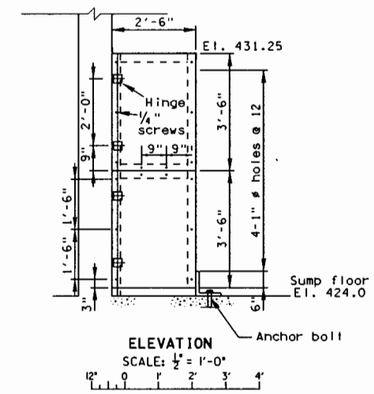

ELEVATION

SCALE: ½" = 1'-0"

FLOAT STATION COVER

Make 1 Galvanized

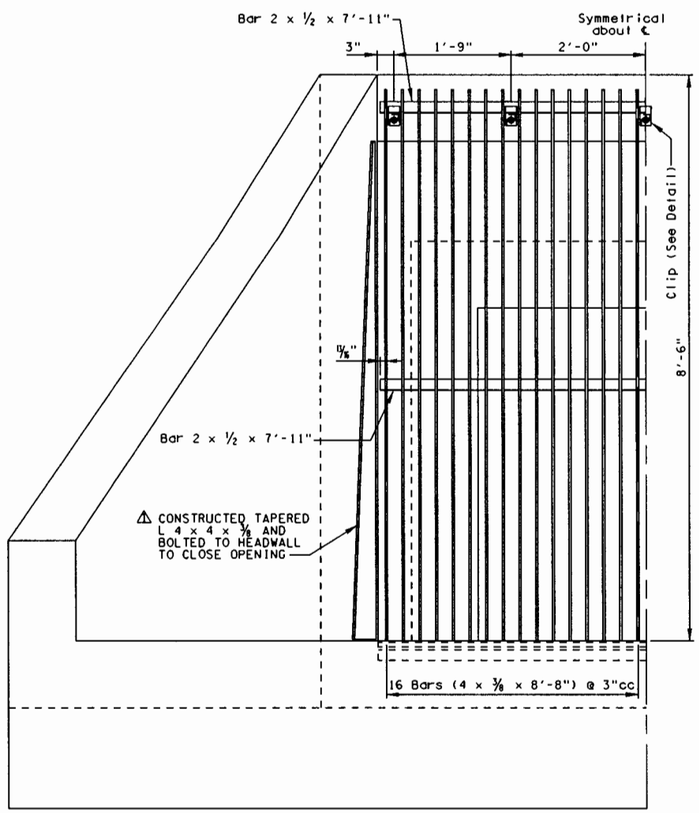

ELEVATION

SCALE: 1" = 1'-0"

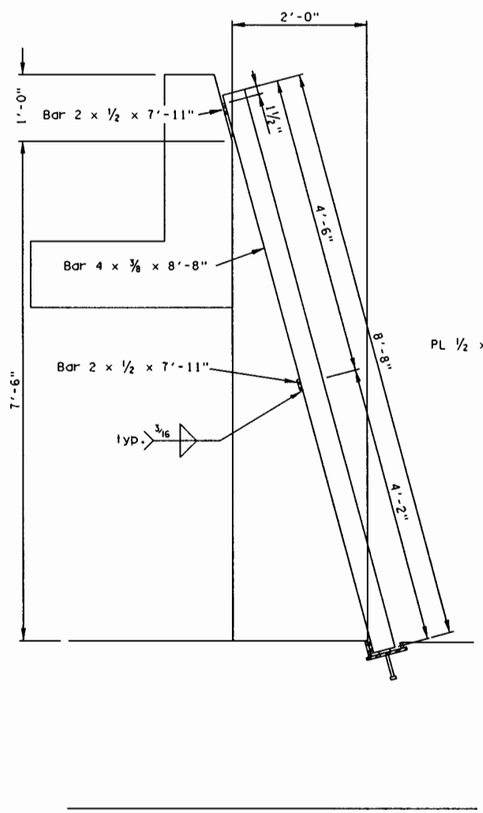

SECTION

SCALE: 1" = 1'-0"

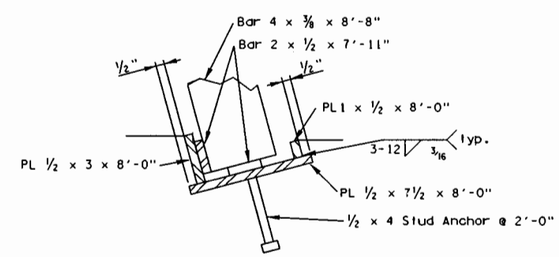

SHOE DETAIL

SCALE: 3" = 1'-0"

Note:
Trashrack and embedded metals, and Float Station are to be galvanized after welding.

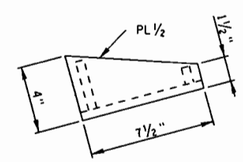

END PLATE DETAIL

SCALE: 3" = 1'-0"

US Army Corps of Engineers
Rock Island District

Symbol	Description	Date	Approved
⚠	REVISED AS CONSTRUCTED	17 DEC 98	DRC/JJC

Revisions

Designed By: MJW
Drawn By: JRK
Checked By: TJW
Reviewed By: RCA
Dates: MAR 1999
Scale: AS SHOWN
Drawing Code: 1-L1-3-1/67
Solicitation Number: DACW25-97-B-0032

U.S. ARMY ENGINEER DISTRICT
CORPS OF ENGINEERS
ROCK ISLAND, ILLINOIS

ILLINOIS WATERWAY
ENVIRONMENTAL MANAGEMENT PROGRAM
LA GRANGE POOL, MILE 124 TO 129.5
LAKE CHAUTAUQUA
OPERATIONS AND MAINTENANCE

PUMPSTATION TRASHRACK

Sheet Reference Number:
S210
Sheet 47 of 84

02-MAR-2005 14:49
mkwardfs0006MPprojectsMEPS210M Manual - Use this onlmeps210.dgn

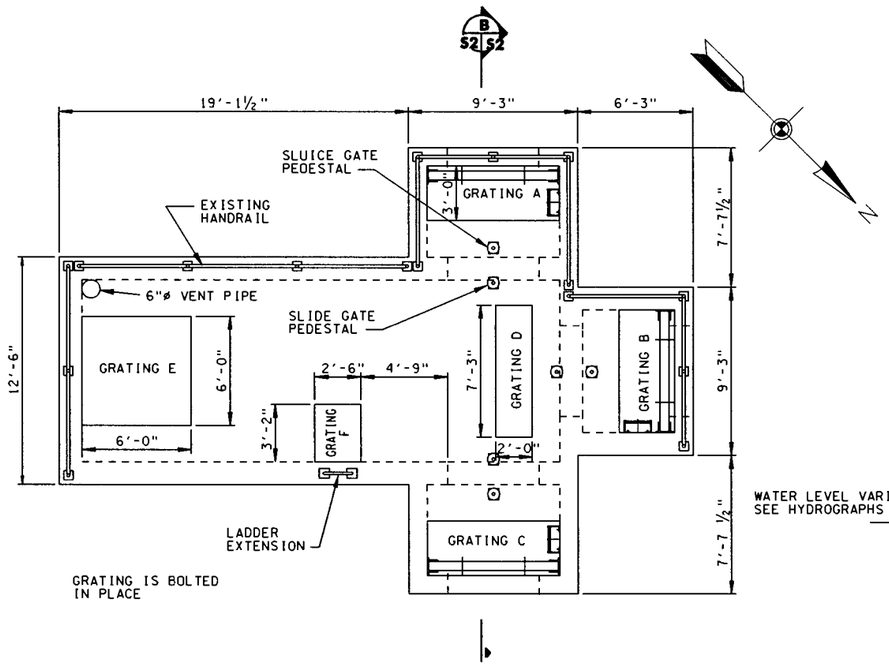

EXISTING PUMP STATION PLAN

SCALE: 1/4" = 1'-0"

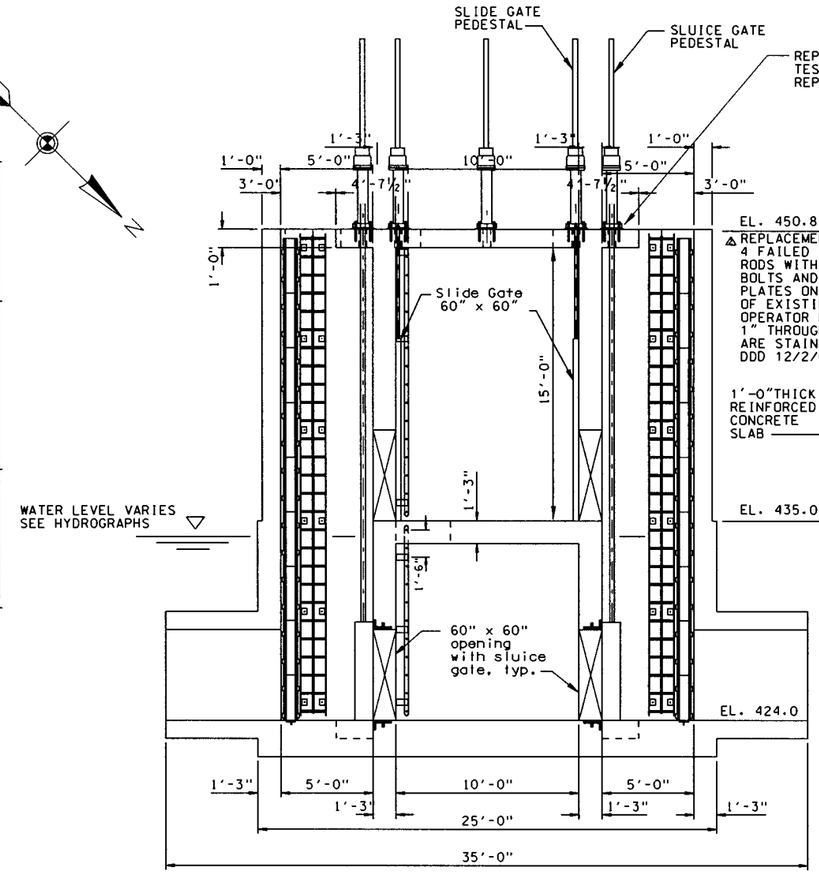

SECTION B S2 S2

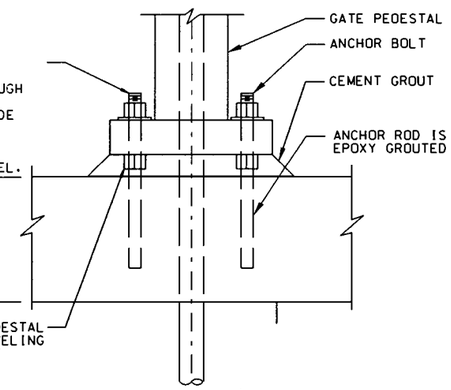

EXISTING GATE PEDESTAL ANCHORAGE

NO SCALE

NOTES:

1. THIS WORK INCLUDES: REMOVE 6 GATE PEDESTALS. REMOVE CEMENT GROUT. TEST PULL-OUT STRENGTH OF EACH ANCHOR ROD (6 GATE PEDESTALS, 4 RODS PER PEDESTAL). REPLACE RODS THAT FAIL TEST. REPLACE GROUT AND PEDESTALS.

2. 2 RODS AND THE GROUT ON A HEAVY DUTY SLUICE GATE PEDESTAL HAVE FAILED AND SHALL BE REPLACED. THE WORK ON THIS PEDESTAL SHALL BE COMPLETED WITHIN 90 DAYS OF THE NOTICE TO PROCEED.

3. GATES AND PEDESTALS ARE MANUFACTURED BY HYDROGATE. HYDROGATE SHOP DRAWINGS ARE AVAILABLE FOR REVIEW.

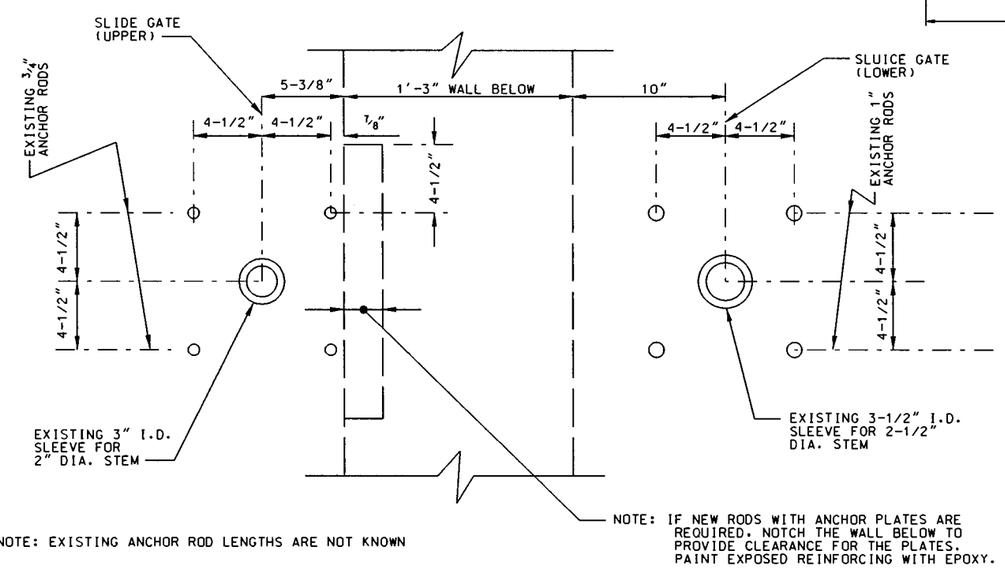

NOTE: EXISTING ANCHOR ROD LENGTHS ARE NOT KNOWN

TYPICAL LIFT PEDESTAL ANCHOR BOLT LOCATION PLAN

(3 - LOCATIONS THUS)

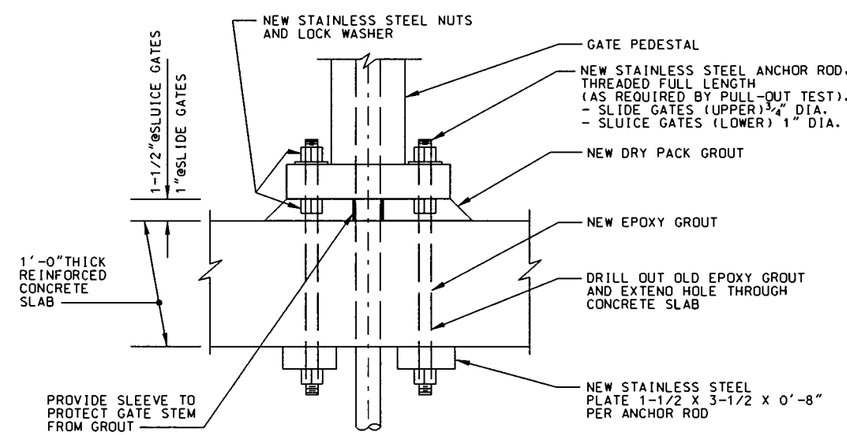

REPAIRS TO GATE PEDESTAL ANCHORAGES

NO SCALE

US Army Corps of Engineers Rock Island District

Symbol	Description	Date	Approved
△	AS CONSTRUCTED	30 MAR 06	MRP/DRC
△	AMD. #1 - ADDED SHEET S2	29 JAN 09	KEW/DRC

Revisions

Date: 25 JUNE 2001
Scale: AS SHOWN
Project Code: 1-L1-3-1/67
Solicitation Number: DACW25-01-B-0012

Designed By: KEW
Drawn By: MRC
Checked By: DRC
Reviewed By: RAL

U.S. ARMY ENGINEER DISTRICT CORPS OF ENGINEERS ROCK ISLAND, ILLINOIS

ILLINOIS WATERWAY PROGRAM
LA GRANGE POOL MAINTENANCE TO 12.9.5
LAKE CHAUTAUQUA
OPERATIONS AND MAINTENANCE

PUMP STATION GATE PEDESTALS ANCHOR ROD REPAIR

Sheet Reference Number: **S220** △
Sheet 48 of 84

02-MAR-2005 14:49
eemvrdfs#c0d0#projects#EP52#DGN Manual - Use this one#ep52s220.dgn

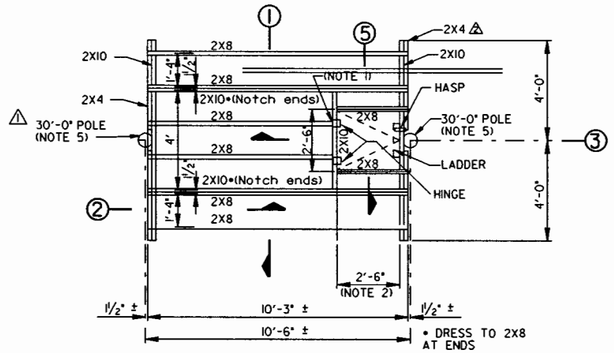

FRAMING PLAN

SCALE: ¾" = 1'-0"

NOTES:

1. JOIST HANGERS SHALL CARRY A MINIMUM OF 620#.
2. PROVIDE BRIDGING AT ENDS AND MID-SPAN OF JOISTS.
3. PROVIDE A 2" X 2" THICK WOOD HATCH COVER FLUSH WITH THE DECK. PROVIDE HEAVTY DUTY HINGES AND HASP FOR PADLOCK.
4. ALL BOLTS AND LAG SCREWS SHALL BE GALVANIZED. AND SHALL HAVE WASHERS AT HEAD AND NUT.
5. PROVIDE OOUGLAS FIR OR SOUTHERN PINE TREATED. CLASS 3 POLES. SET A MINIMUM OF 6'-0" INTO GROUND.

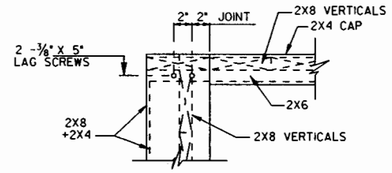

CORNER DETAIL AT TOP OF RAIL

SCALE: 1½" = 1'-0"

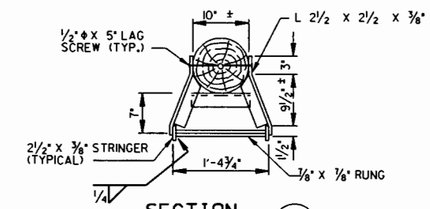

SECTION 4

SCALE: 1" = 1'-0"

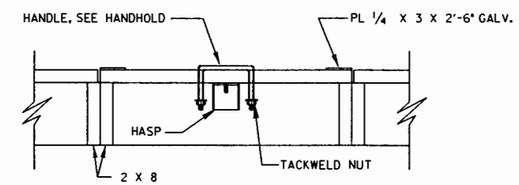

SECTION 5

SCALE: 1½" = 1'-0"

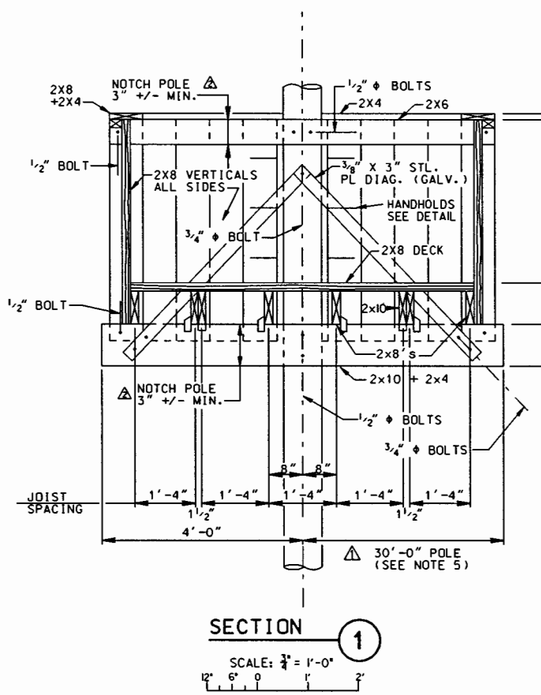

SECTION 1

SCALE: ¾" = 1'-0"

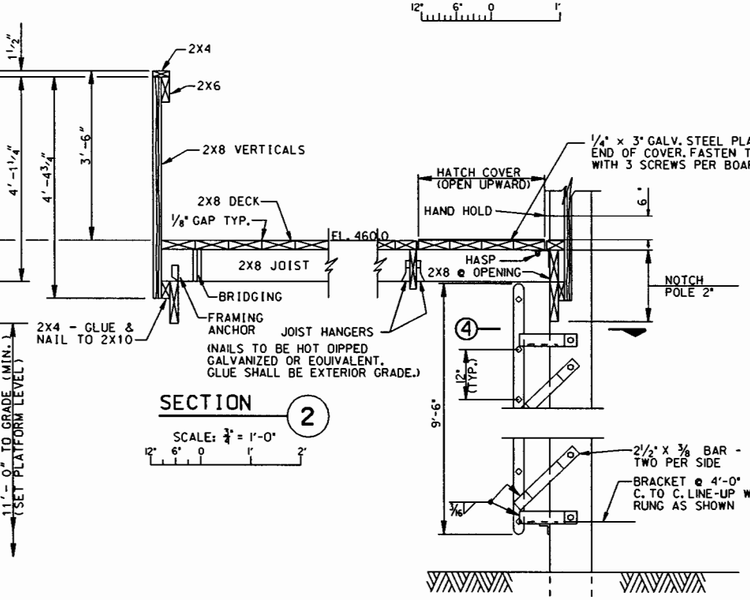

SECTION 2

SCALE: ¾" = 1'-0"

SECTION 3

SCALE: ¾" = 1'-0"

NOTE:

LADDER TO BE FABRICATED IN LENGTHS THAT WILL PERMIT GALVANIZING AFTER FABRICATION. SPLICES WILL BE FULL PENETRATION WELDS. GALVANIZING DESTROYED BY WELDING SHALL BE REPAIRED AS DESCRIBED IN SPECIFICATIONS.

REFERENCES:

1. SEE SHEET S150 FOR LOCATION OF ELEVATED CONTROL PLATFORM.

HANDHOLD

US Army Corps of Engineers Rock Island District

Symbol	Description	Date	Approved
1	REVISED AS CONSTRUCTED	17 DEC 98	DRC/JJC
2	ADD. WT POLE LENGTH	21 AUG 92	

Revisions

U.S. ARMY ENGINEER DISTRICT CORPS OF ENGINEERS ROCK ISLAND, ILLINOIS

Designed By: KEW | Dates: MAR 1999
Drawn By: HDG | Scale: AS SHOWN
Checked By: DRR | Drawing Code: 1-L1-3-1/67
Reviewed By: DJH | Solicitation Number: DACW25-97-B-0032

ILLINOIS WATERWAY
ENVIRONMENTAL MANAGEMENT PROGRAM
LA GRANGE POOL, MILE 124 TO 129.5
LAKE CHAUTAUQUA
OPERATIONS AND MAINTENANCE

ELEVATED CONTROL PLATFORM

Sheet Reference Number: **S230**

Sheet 49 of 84

02-MAR-2005 14:50

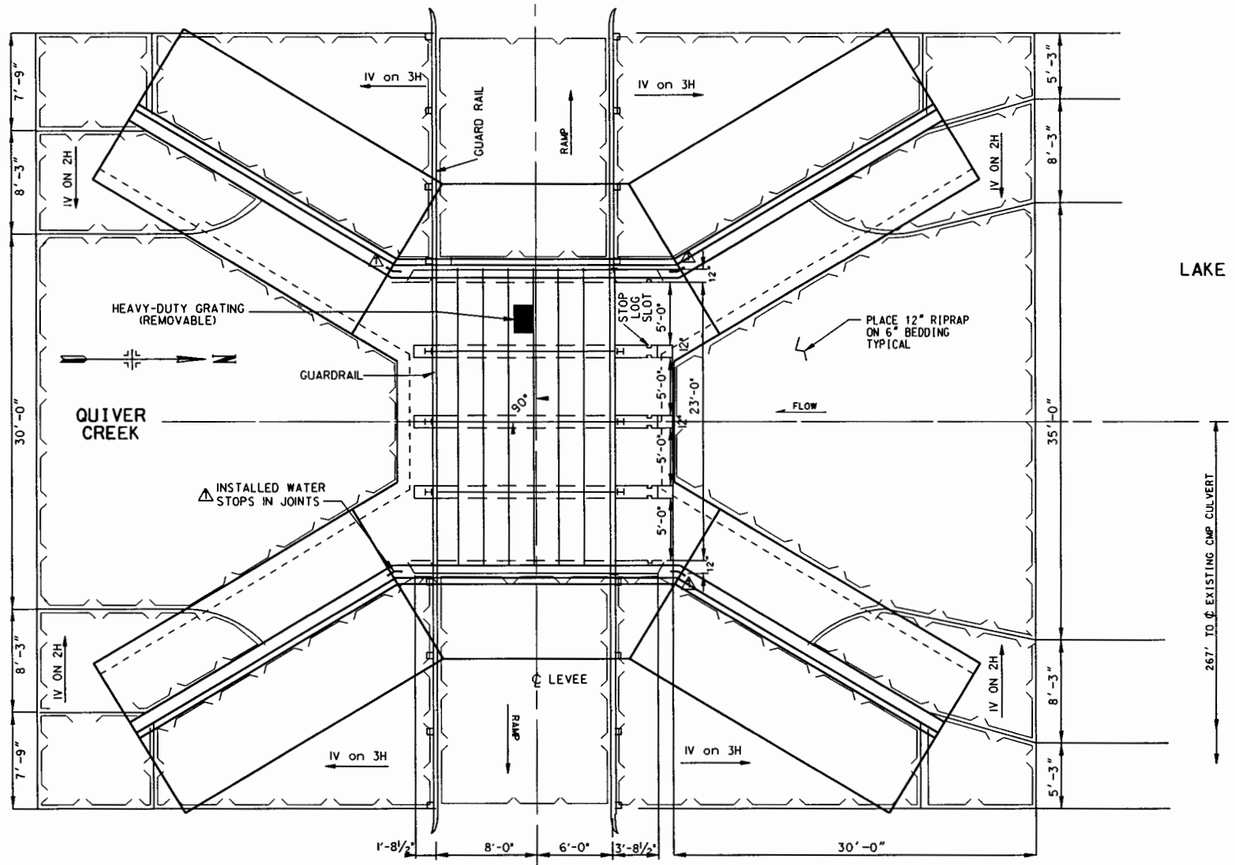

PLAN

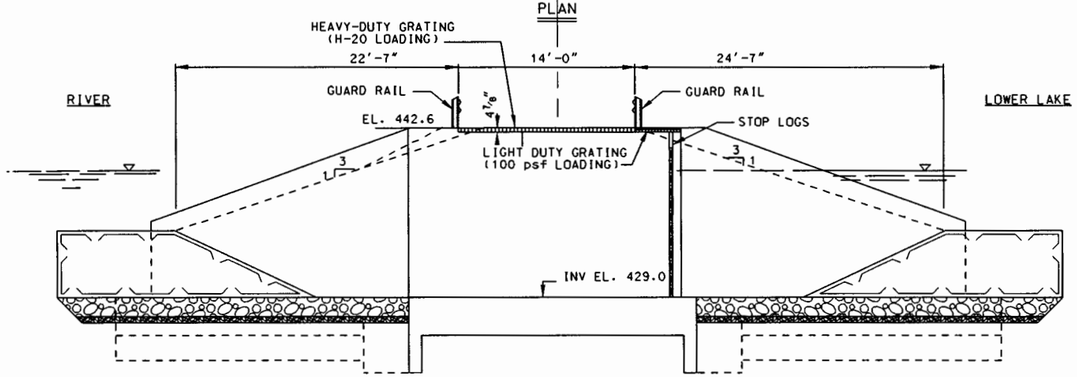

LONGITUDINAL SECTION

SCALE: ¾" = 1'-0"

12" 0 5' 10'

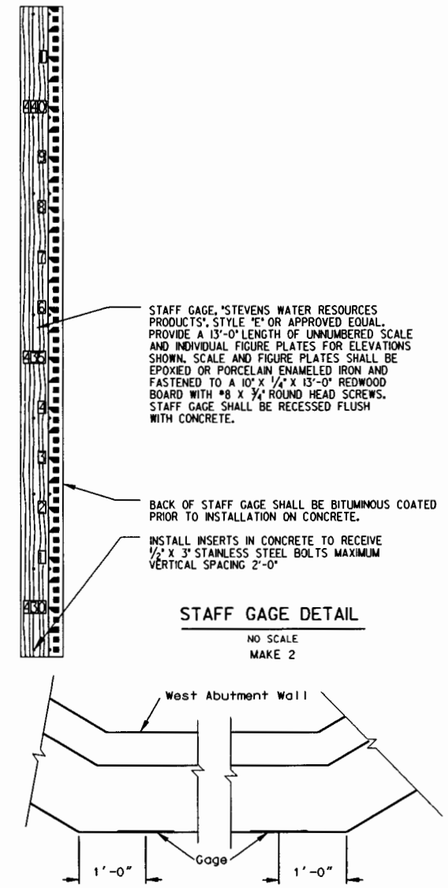

STAFF GAGE DETAIL

NO SCALE

MAKE 2

STAFF GAGE LOCATION

US Army Corps of Engineers
Rock Island District

Symbol	Description	Date	Approved
△	REVISED AS CONSTRUCTED	10 DEC 98	DWW/JK

Revisions

U.S. ARMY ENGINEER DISTRICT
CORPS OF ENGINEERS
ROCK ISLAND, ILLINOIS

Designed By:	MJW	Date:	MAR 1999
Drawn By:	JRK	Scale:	AS SHOWN
Checked By:	TJW	Drawing Code:	1-L1-3-1/67
Reviewed By:	RCA	Solicitation Number:	DACW25-97-B-0032

ILLINOIS WATERWAY
ENVIRONMENTAL MANAGEMENT PROGRAM
LA GRANGE POOL, MILE 124 TO 129.5
LAKE CHAUTAUQUA
OPERATIONS AND MAINTENANCE

STOPLOG STRUCTURE PLAN AND SECTION

Sheet Reference Number:

S240

Sheet 50 of 84

02-MAR-2005 14:50
mdarcf@MCDOMPROJECTS\EP52\ROM Manual - Use this onlmap52s240.dgn

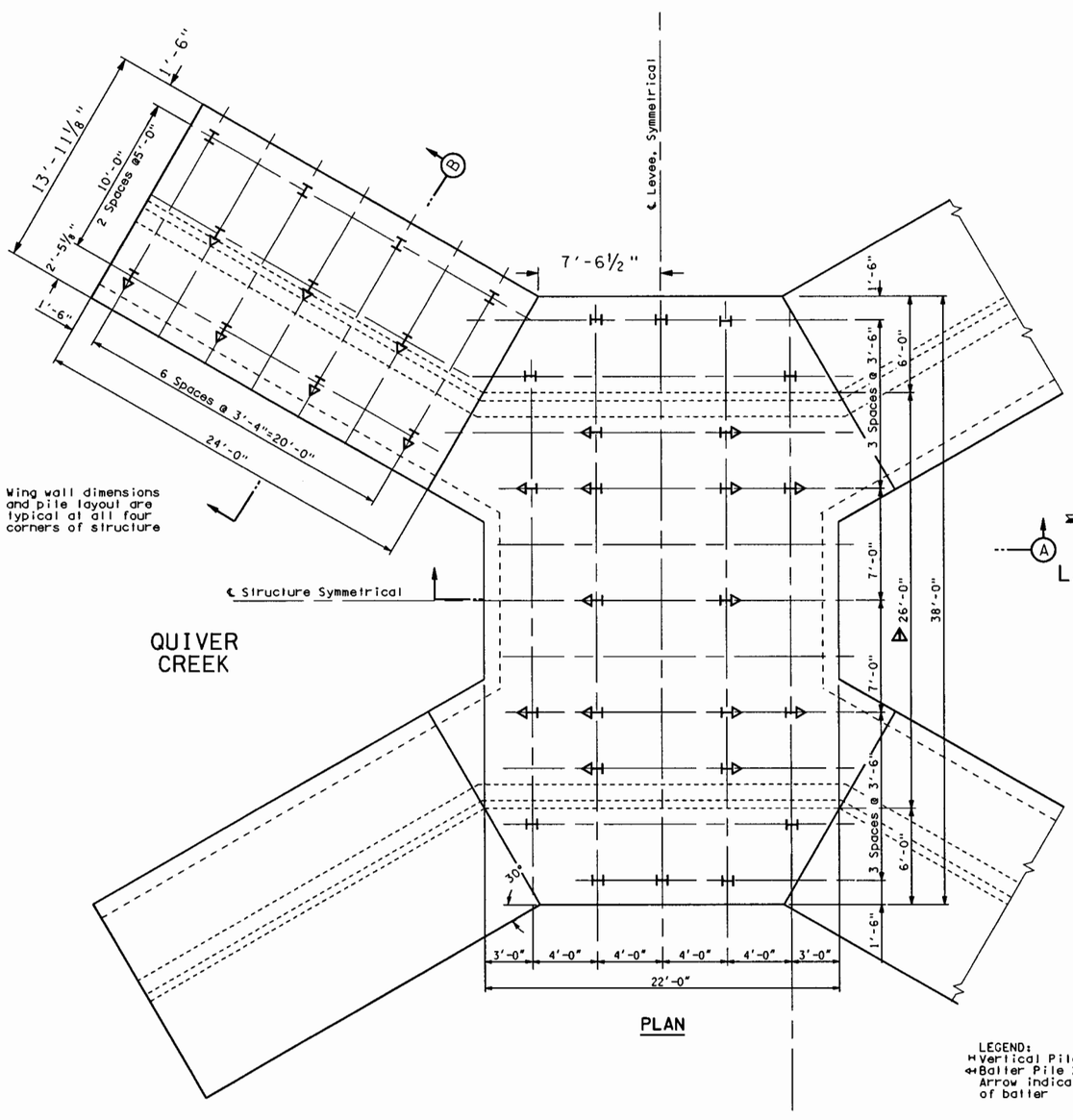

PLAN

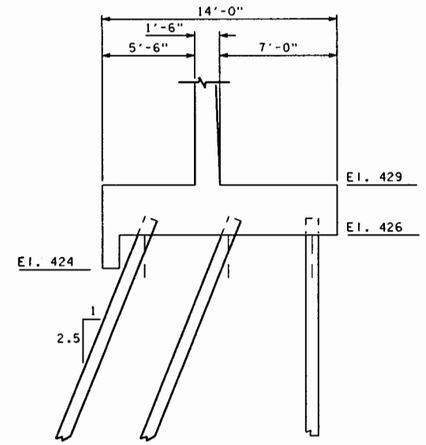

SECTION B

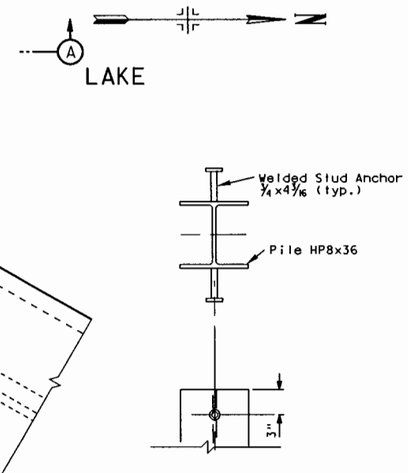

PILE HEAD DETAILS

SCALE: 1 1/2" = 1'-0"

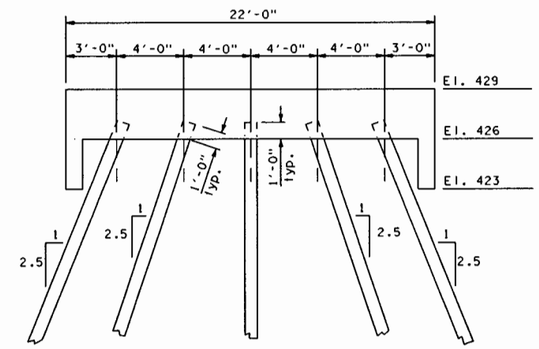

SECTION A

LEGEND:
- Vertical Pile
- Batter Pile 2.5V on 1 H. Arrow indicates direction of batter

NOTES:
1. Piles are HP 8x36 and conform to ASTM A36 steel specification.
2. Piles shall be of sufficient length to be driven to refusal as defined in the specifcations. Refusal depth may be determined prior to ordering piles by driving a representative pile.

4 3 2 1 0 4
SCALE: 1/4"=1'-0"

US Army Corps of Engineers
Rock Island District

Symbol	Description	Date	Approved
A	REVISED AS CONSTRUCTED	11 DEC 98	DRC/JJC

Revisions

Designed By: NJW
Date: MAR 1999
Drawn By: JRK
Scale: AS SHOWN
Checked By: JGB
Drawing Code: 1-1-3-1/67
Reviewed By: RCA
Solicitation Number: DACW25-97-B-0032

U.S. ARMY ENGINEER DISTRICT
CORPS OF ENGINEERS
ROCK ISLAND, ILLINOIS

ILLINOIS WATERWAY
ENVIRONMENTAL MANAGEMENT PROGRAM
LA GRANGE POOL, MILE 124 TO 129.5
LAKE CHAUTAUQUA
OPERATIONS AND MAINTENANCE

STOPLOG STRUCTURE PILE LAYOUT

Sheet Reference Number:
S250
Sheet 51 of 84

02-MAR-2005 14:51
www/drawings/projects/EPS2/OM Manual - Use this only/eps52s250.dgn

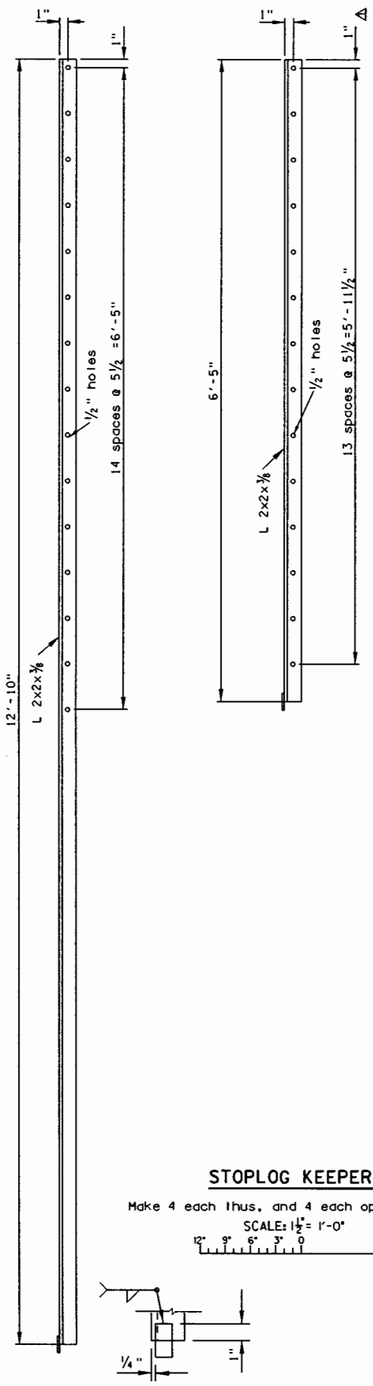

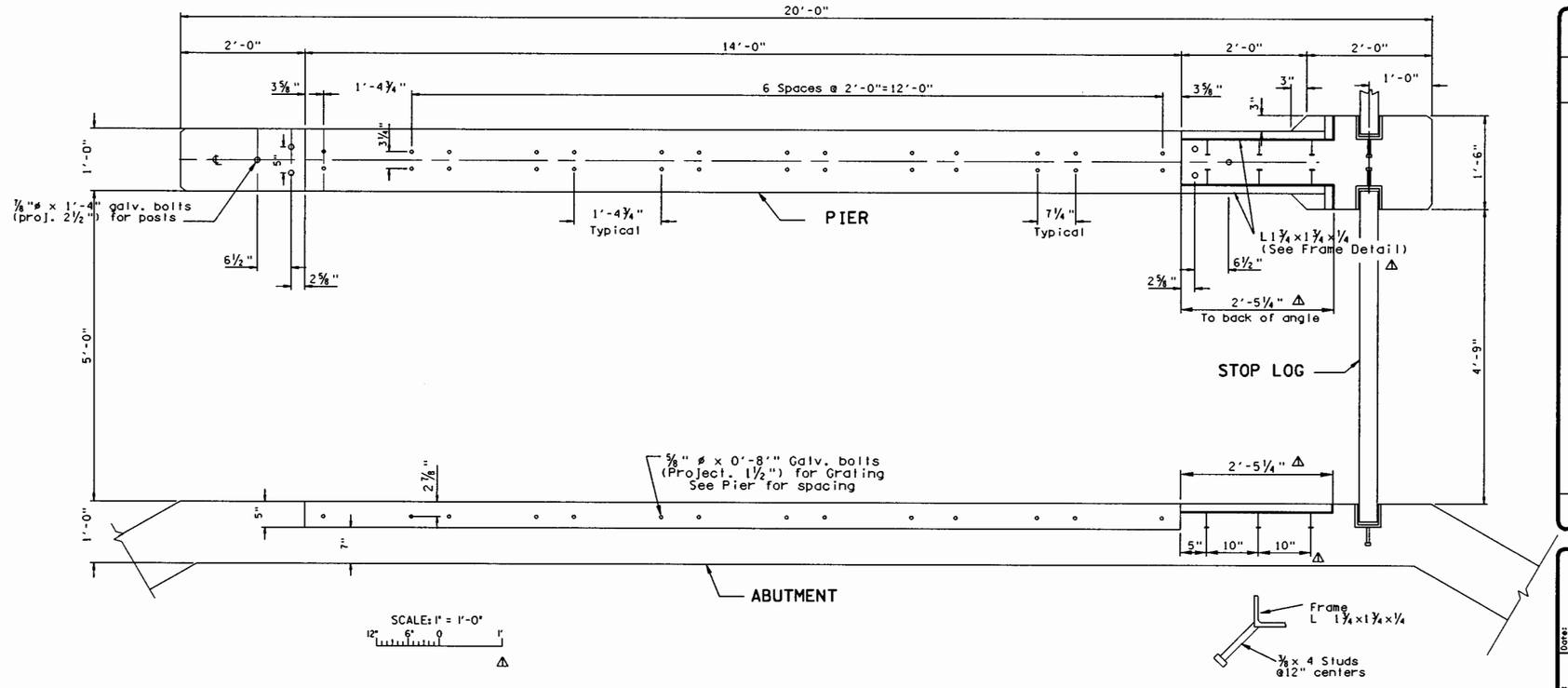

FRAME DETAIL

NO SCALE

STOPLOG KEEPERS

Make 4 each thus, and 4 each opposite hand

SCALE: 1½" = 1'-0"

12" 9" 6" 3" 0 1'

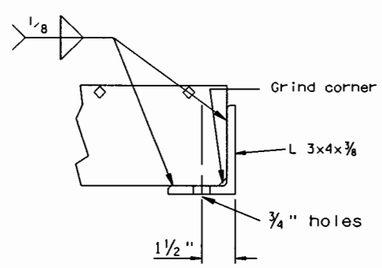

BANDING DETAIL

Clear span 5'-0"
Bearing bars 4½"x½"@ 2⅜" c.c.
⅜"Twisted cross bars @ 4" c.c.
Banding bars on sides.

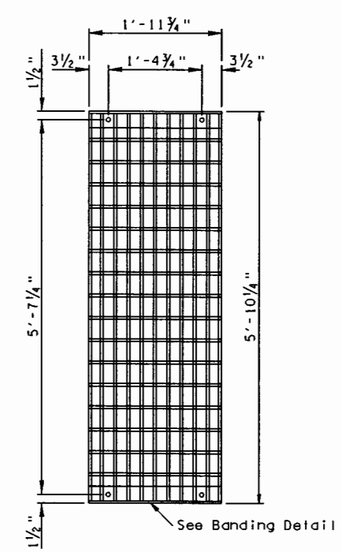

HEAVY DUTY GRATING DETAILS

Clear span 5'-0"
Bearing bars 1½"x3/16"@ 3/16" c.c.
¼ "Twisted cross bars @ 4" c.c.
(See Sheet S-2 for grating fastener details)

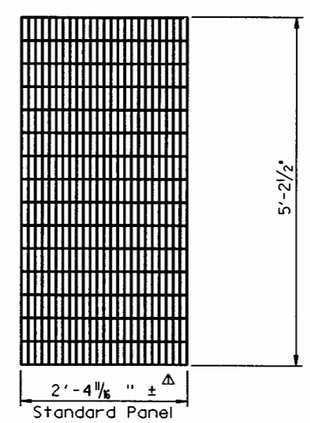

LIGHT DUTY GRATING DETAILS

(ASTM A36) GALVANIZED

US Army Corps of Engineers
Rock Island District

Symbol	Description	Date	Approved
	AS CONSTRUCTED		
	Mod. #1- Corrected lightduty grating description and clarifications	11 DEC 98 / 5 Feb 99	DRC/JJC / RCA

Revisions

Designed By: MJW
Date: MAR 1999
Drawn By: JRK
Scale: AS SHOWN
Checked By: TJW
Drawing Code: 1-L1-3-1/67
Reviewed By: RCA
Solicitation Number: DACW25-97-B-0032

U.S. ARMY ENGINEER DISTRICT
CORPS OF ENGINEERS
ROCK ISLAND, ILLINOIS

ILLINOIS WATERWAY
ENVIRONMENTAL MANAGEMENT PROGRAM
LA GRANGE POOL, MILE 124 TO 129.5
OPERATIONS AND MAINTENANCE

STOPLOG STRUCTURE TRASHRACK

Sheet Reference Number:
S260
Sheet 52 of 84

02-MAR-2005 14:51
mwarr/d:\wbcadmp0\jobs\MEP52\dgn manual - Use mis cellmap52s260.dgn

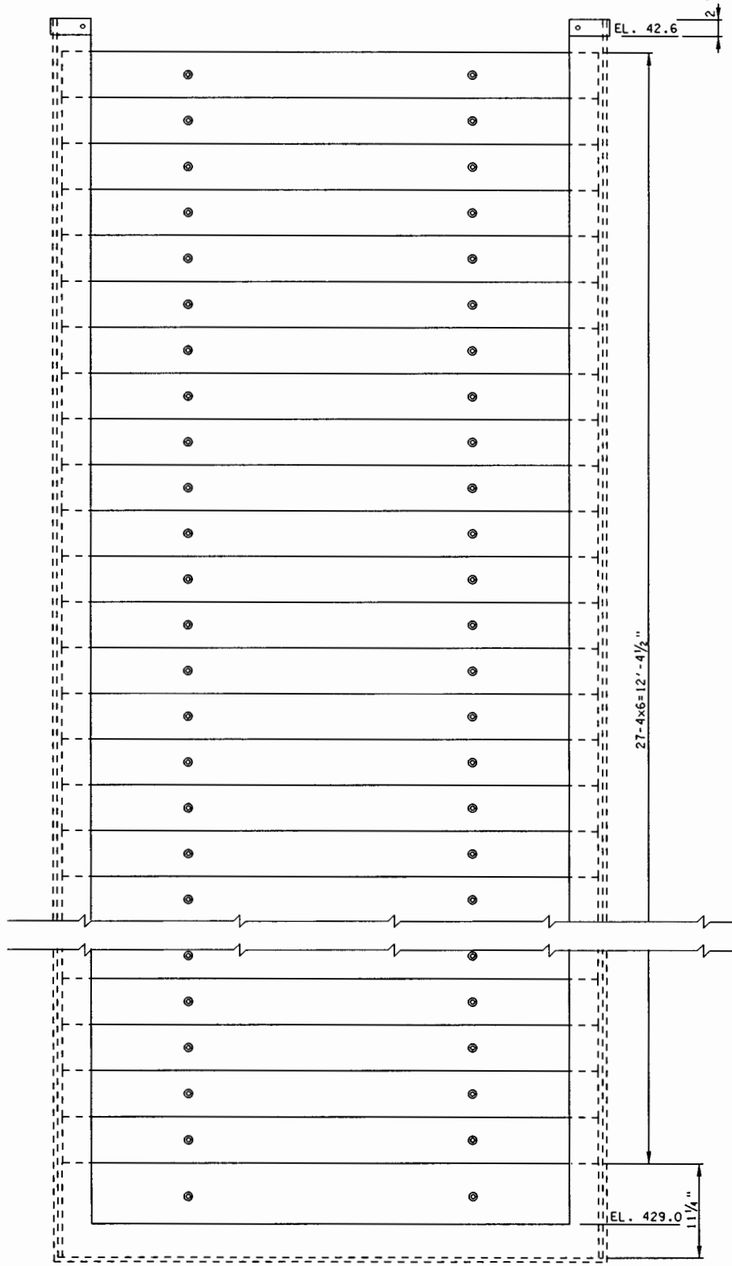

STOP LOG ELEVATION

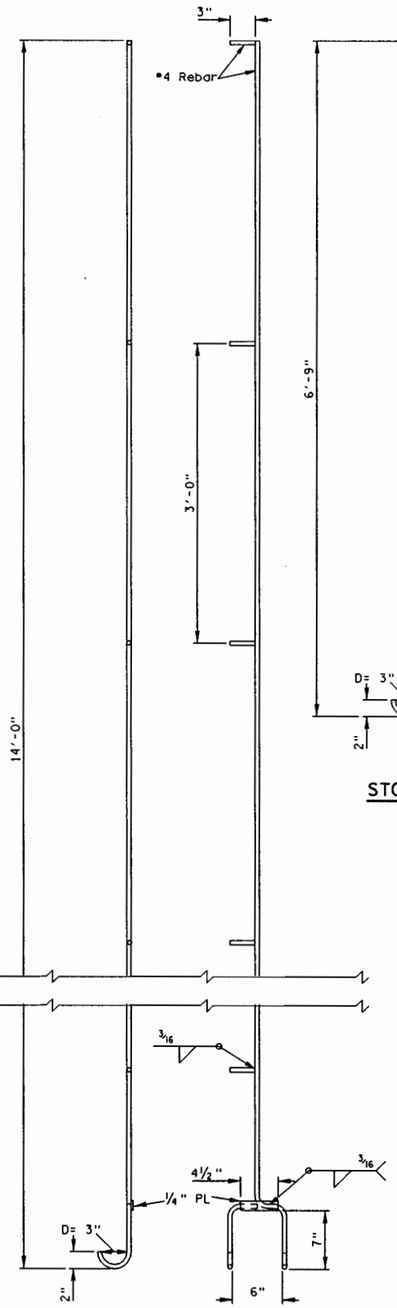

STOP LOG TOOL
MAKE 2 THUS

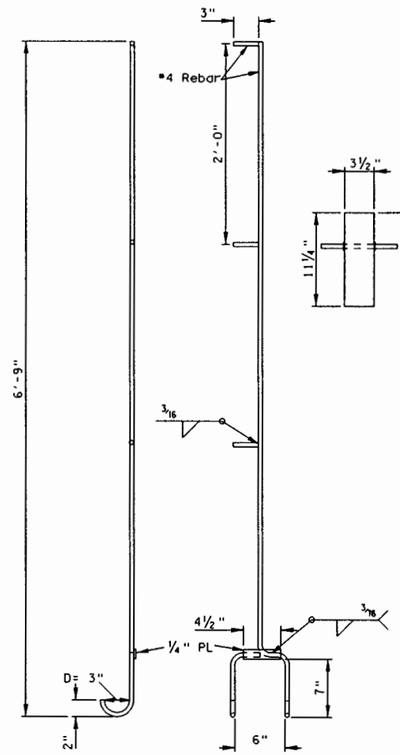

STOP LOG TOOL
MAKE 2 THUS

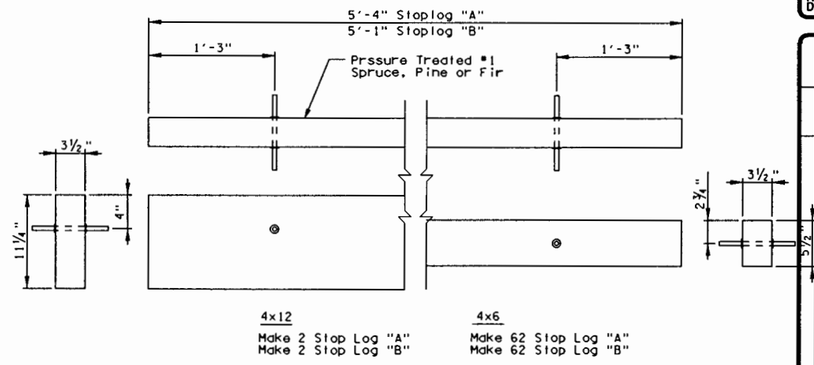

STOP LOGS "A" & "B"

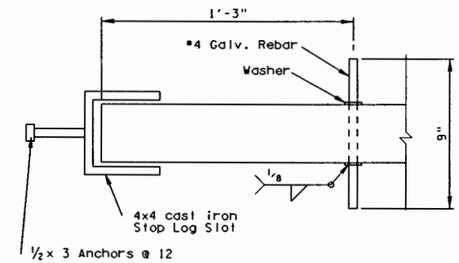

STOP LOG DETAIL

SCALE: 3" = 1'-0"

SCALE: 1½" = 1'-0"

US Army Corps of Engineers
Rock Island District

Symbol	Description	Date	Approved

Revisions

AS CONSTRUCTED

DRAFT

U.S. ARMY ENGINEER DISTRICT
CORPS OF ENGINEERS
ROCK ISLAND, ILLINOIS

Designed By: MJW
Drawn By: JRK
Checked By: TJW
Reviewed By: RCA
Date: MAR 1999
Scale: AS SHOWN
Drawing Code: 1-L1-3-1/67
Solicitation Number: DACW25-97-B-0032

ILLINOIS WATERWAY
ENVIRONMENTAL MANAGEMENT PROGRAM
LA GRANGE POOL, MILE 124 TO 129.5
OPERATIONS AND MAINTENANCE

STOPLOG STRUCTURE STOPLOG DETAILS

Sheet Reference Number:
S270
Sheet 53 of 84

02-MAR-2005 14:52

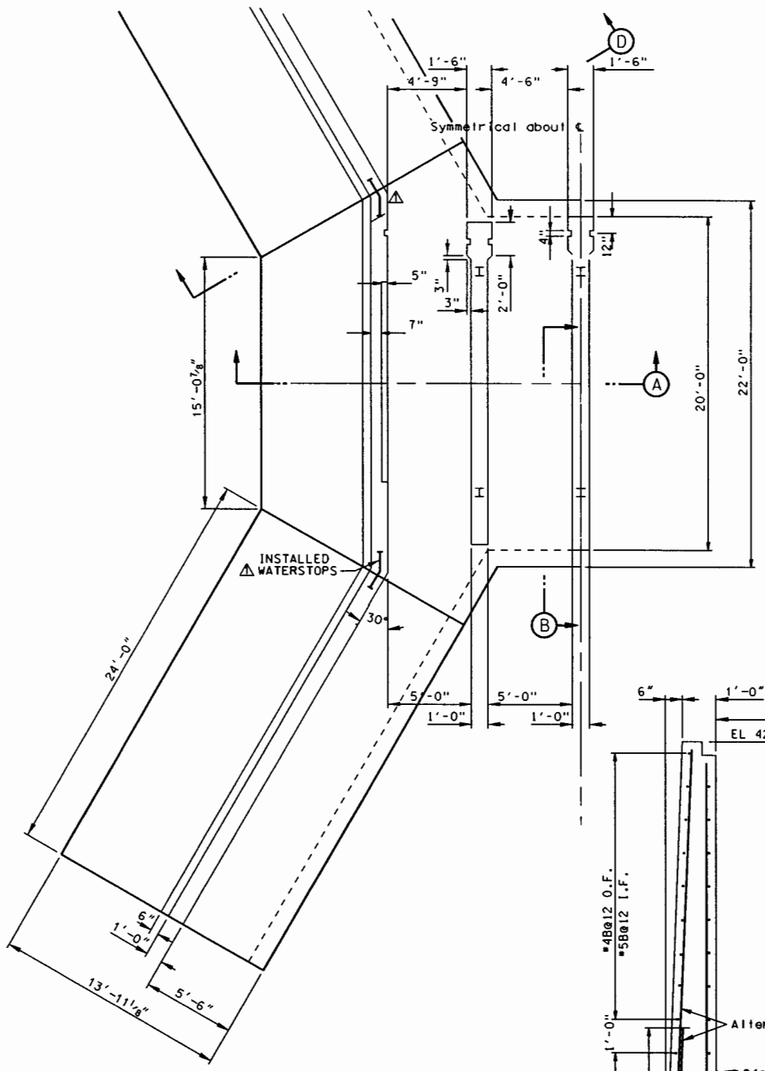

PARTIAL PLAN

SCALE: ¼" = 1'-0"

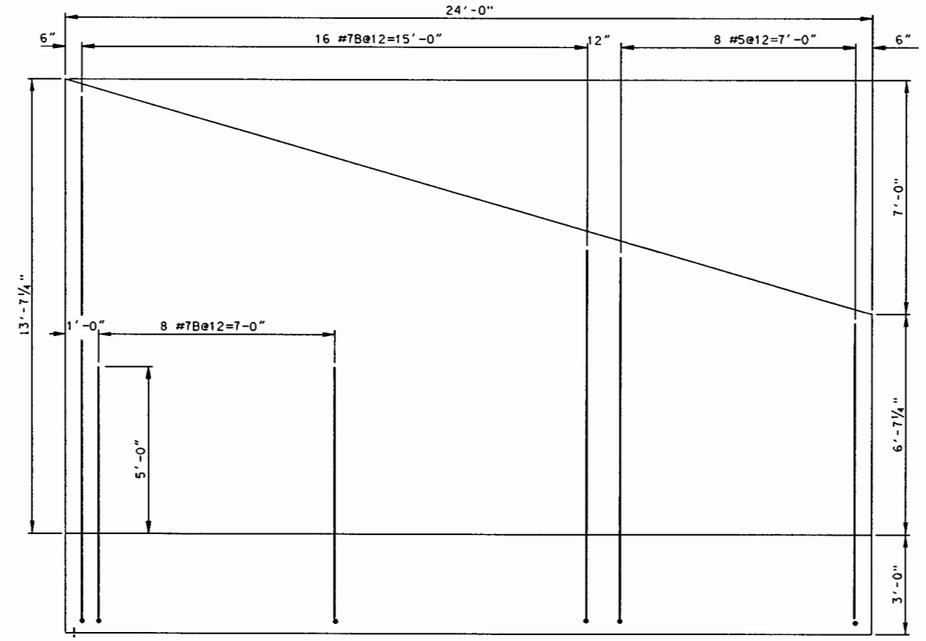

ELEVATION -LANDSIDE REINFORCING

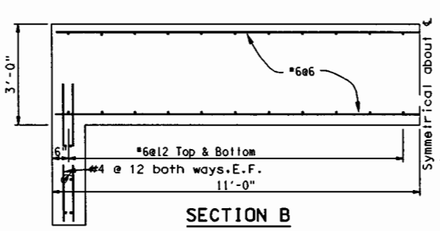

SECTION B

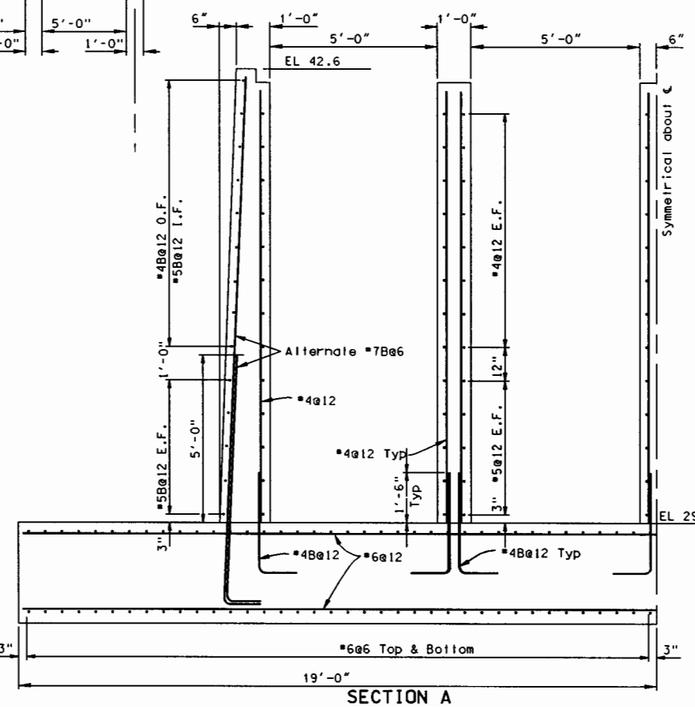

SECTION A

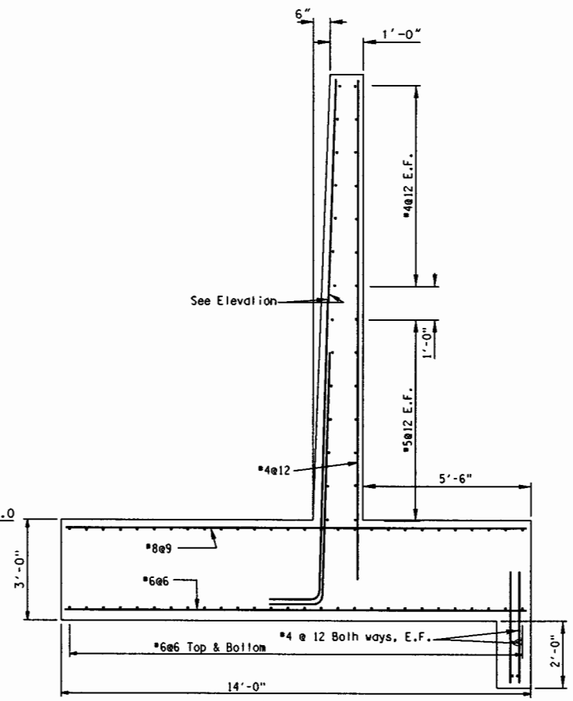

SECTION D

SCALE: ½" = 1'-0"

US Army Corps of Engineers
Rock Island District

Symbol	Revisions	Description	Date	Approved
1	REVISED AS CONSTRUCTED		17 DEC 99	DRC/JJC

U.S. ARMY ENGINEER DISTRICT
CORPS OF ENGINEERS
ROCK ISLAND, ILLINOIS

Designed By:	MJW	Date:	MAR 1999
Drawn By:	JRK	Scale:	AS SHOWN
Checked By:	JGB	Drawing Code:	1-L1-3-1/67
Reviewed By:	RCA	Solicitation Number:	DACW25-97-B-0032

ILLINOIS WATERWAY
ENVIRONMENTAL MANAGEMENT PROGRAM
LA GRANGE POOL, MILE 124 TO 129.5
LAKE CHAUTAUQUA
OPERATIONS AND MAINTENANCE

STOPLOG STRUCTURE REINFORCING DETAILS

Sheet Reference Number:
S280
Sheet 54 of 84

02-MAR-2005 14:53
WWW:/DFS/ROCKDMP/projects/MEP52/MDM Manual - Use this ordwg52s280.dgn

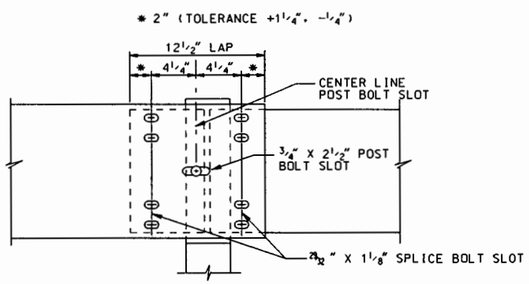

SPLICE AT POST

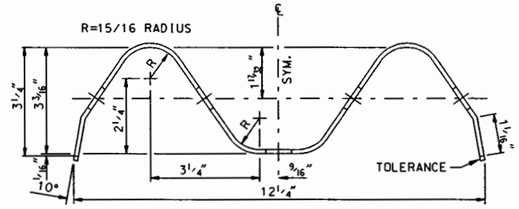

SECTION THRU GUARD RAIL

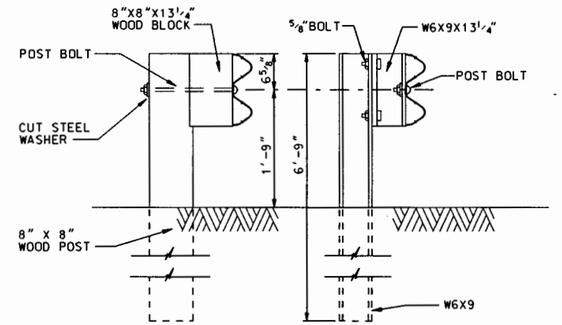

WOOD POST & BLOCK STEEL POST & BLOCK

GUARD RAIL DETAILS

NO SCALE

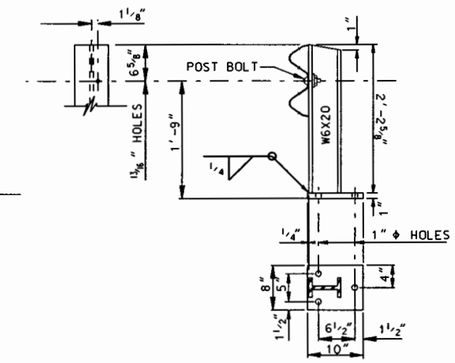

RAIL POST

MAKE 7 NO SCALE

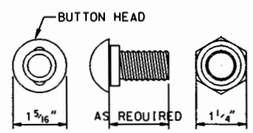

OVAL SHOULDER SHALL BE OF ADEQUATE HEIGHT LENGTH & SHAPE TO PREVENT TURNING DURING INSTALLATION OR REMOVAL OF BOLT.

5/8" POST OR SPLICE BOLT

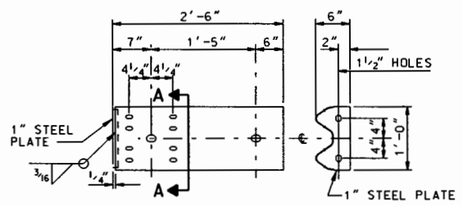

10 GAGE

PLATE "B"

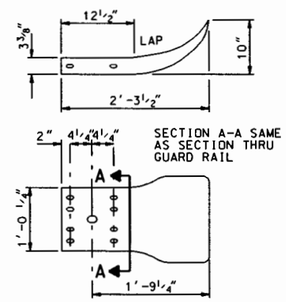

12 GAGE

END SECTION

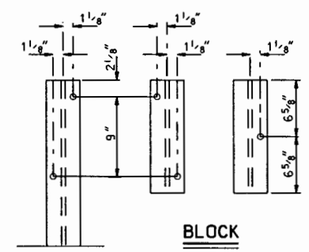

POST

BLOCK

ALL HOLES 13/16" DIAM.

HOLE PUNCHING DETAILS FOR STEEL POSTS & BLOCKS

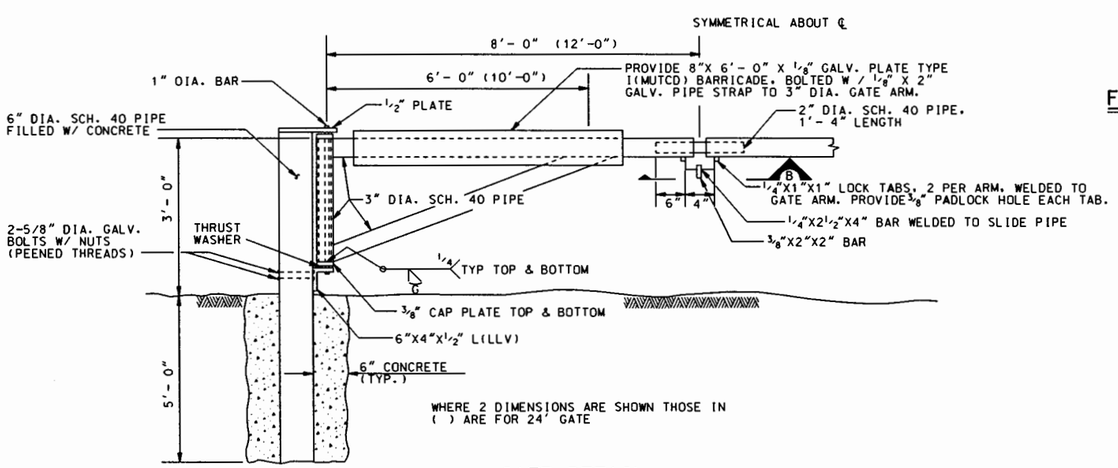

GATE DETAIL

MAKE 1 16'
MAKE 1 24'

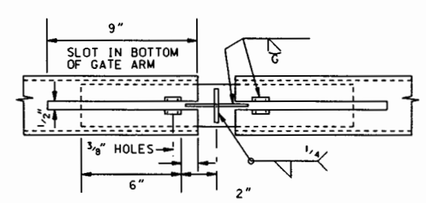

DETAIL B

GUARD RAIL NOTES:

1. STEEL POSTS SHALL BE FABRICATED FROM MATERIAL MEETING THE REQUIREMENTS OF ASTM A36. THE SECTIONS SHALL BE GALVANIZED AFTER FABRICATION IN ACCORDANCE WITH THE REQUIREMENTS OF AASHTO M111.
2. WOOD POST AND BLOCKS SHALL BE DOUGLAS FIR "DENSE NO. 1 STRUCTURAL GRADE" CONFORMING TO THE REQUIREMENTS OF PARAGRAPH 131-bb OF THE STANDARD GRADING RULES FOR WEST COAST LUMBER, NO. 16, DEC. 16, 1976, REVISED EDITION; OR SOUTHERN PINE "NO. 1, SR. GRADE" CONFORMING TO THE REQUIREMENTS OF PARAGRAPH 405 OF THE SOUTHERN PINE INSPECTION BUREAU GRADING RULES, 1977 EDITION.
3. WASHERS SHALL BE USED AT ALL POST BOLTS (BETWEEN BOLT HEAD AND BEAM). THEY SHALL BE RECTANGULAR IN SHAPE (3" X 13/4" X 3/16") MIN. AND FLAT, OR IF NECESSARY OF SUCH DESIGN TO FIT THE CONTOUR OF THE BEAM. WASHERS SHALL HAVE 11/16" X 1" HOLE.
4. ALL DIMENSIONS ARE SUBJECT TO MANUFACTURING TOLERANCES EXCEPT WHERE ALLOWABLE TOLERANCES ARE SHOWN.

US Army Corps of Engineers Rock Island District

Symbol	Description	Date	Approved
AS CONSTRUCTED	Revisions	17 DEC 99	DRC/JJC

Designed By: MJW | Dates: MAR 1999
Drawn By: HDG | Scale: AS SHOWN
Checked By: TJW | Drawing Code: 1-L1-3-1/67
Reviewed By: RCA | Solicitation Number: DACW25-97-B-0032

U.S. ARMY ENGINEER DISTRICT CORPS OF ENGINEERS ROCK ISLAND, ILLINOIS

ILLINOIS WATERWAY
ENVIRONMENTAL MANAGEMENT PROGRAM
LA GRANGE POOL, MILE 124 TO 129.5
LAKE CHAUTAUQUA
OPERATIONS AND MAINTENANCE

GUARD RAIL AND MISC. DETAILS

Sheet Reference Number:
S290
Sheet 55 of 84

02-MAR-2005 14:53
wesmrd6\moddmprojects\MEP2\dgn manual - Use this onlmep52290.dgn

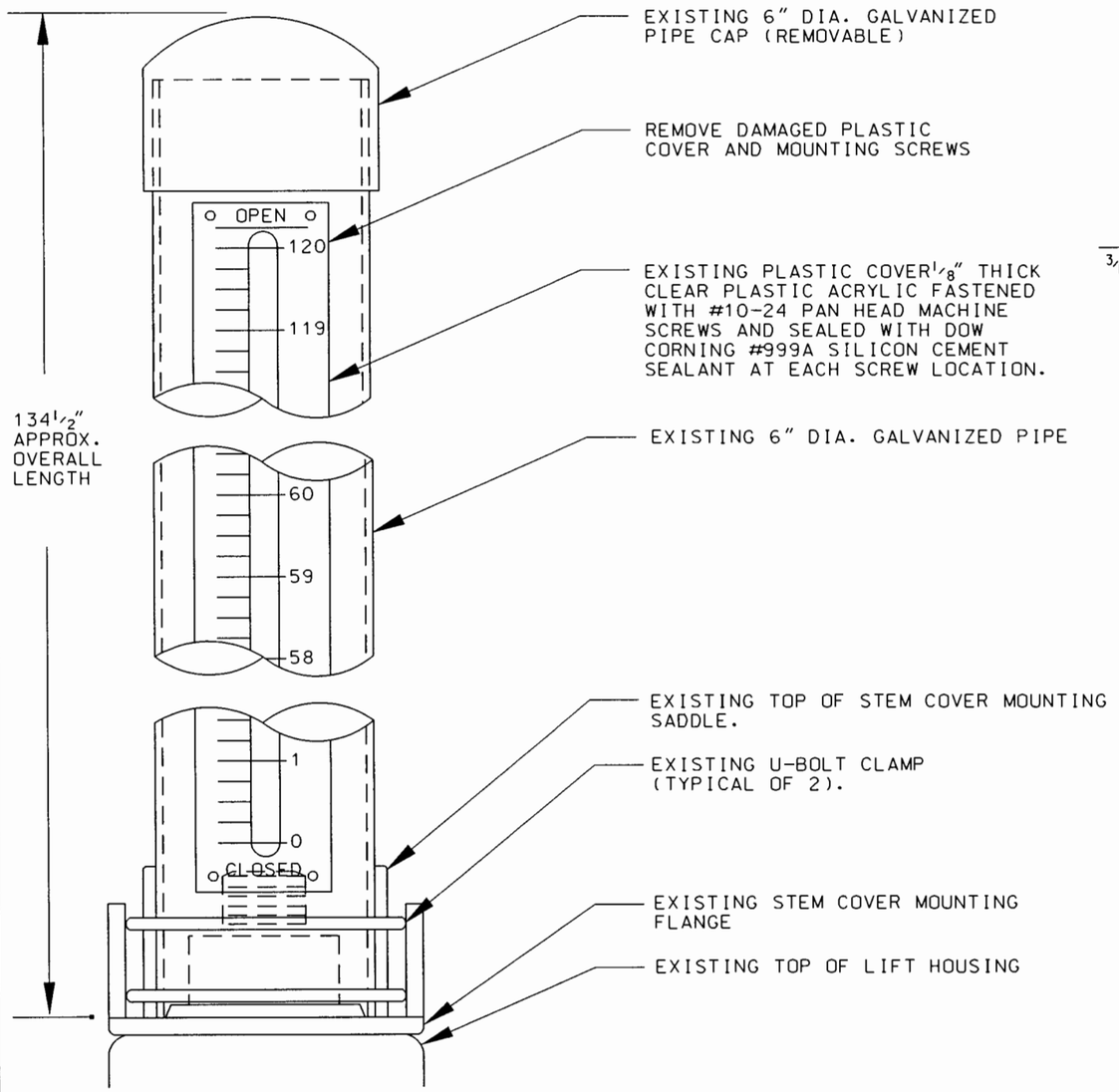

SLOTTED GALVANIZED STEM COVER WITH MYLAR INDICATION (EXISTING) - 3 EACH

NOT TO SCALE

MISCELLANEOUS SUPPLY ITEMS:

1. PROVIDE PORTABLE GAS POWERED OPERATOR WITH REQUIRED ADAPTORS TO OPERATE GATES AT PUMP STATION AND CELLULAR STRUCTURE - SEE SPECIFICATIONS.
2. PROVIDE PORTABLE ELECTRIC SUMP PUMP WITH HOSES AND EXTENSION CORD FOR PUMP STATION. DEWATER SUMP IN COORDINATION WITH CONTRACTING OFFICER - SEE SPECIFICATIONS.
3. PROVIDE SAFETY HARNESS COMPATIBLE WITH LADDERS AND CENTER SAFETY RAIL LOCATED AT PUMP STATION - SEE SPECIFICATIONS.

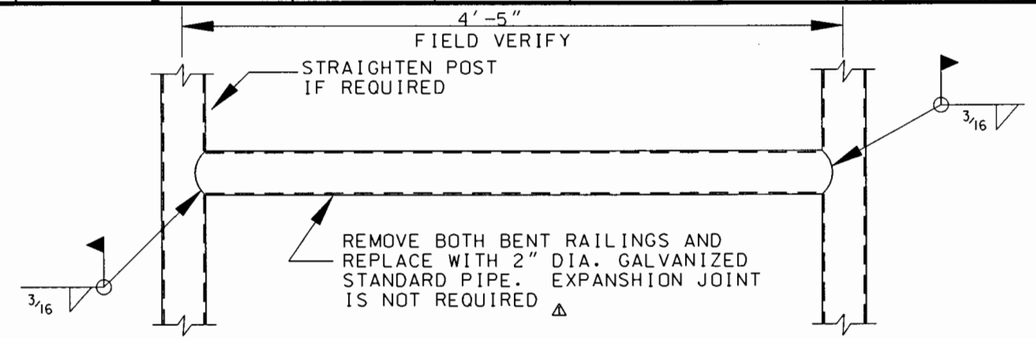

HEADWALL HANDRAIL REPAIR

NOT TO SCALE

NOTES:

1. SPRAY PAINT WELD LOCATIONS WITH COLD APPLIED GALVANIZING.
2. BENT HANDRAIL IS LOCATED AT PUMP STATION. TRASH RACK HEADWALL AT LOWER LAKE.

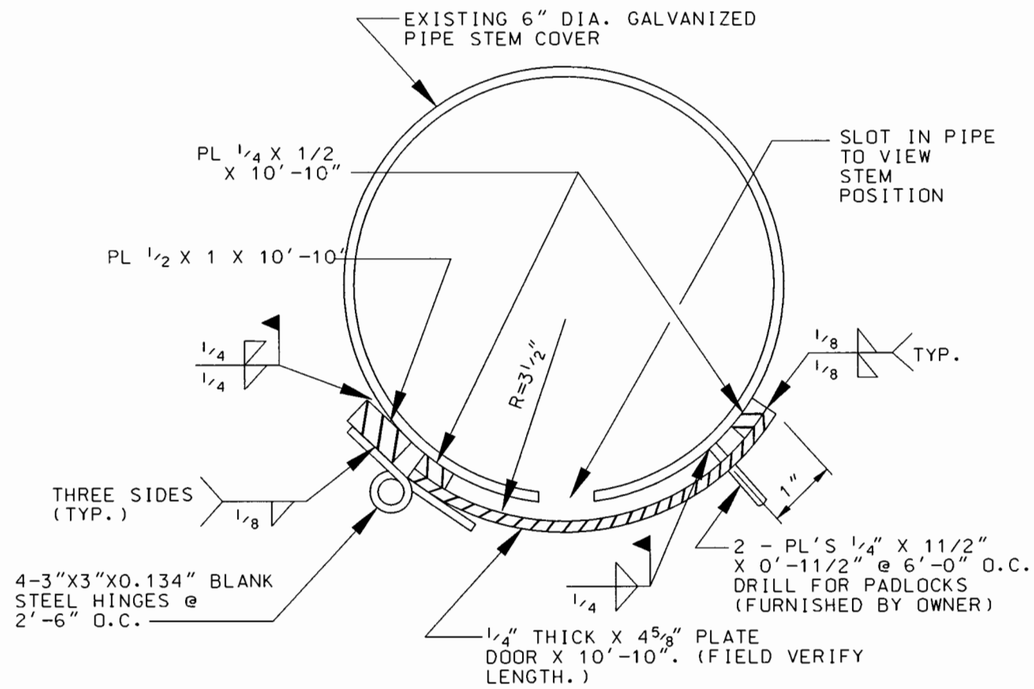

TOP SECTION VIEW STEM COVER DOOR DETAIL

NOT TO SCALE (MAKE 3)

NOTES:

1. REMOVE STEM COVER TO CLEAR STEM OF DEBRIS AND INSPECT.
2. GALVANIZE AFTER FABRICATION.
3. STEM COVERS ARE LOCATED AT THE CELLULAR WATER CONTROL STRUCTURE. NORTHEAST CORNER OF PROJECT.

US Army Corps of Engineers Rock Island District

Symbol	Description	Date	Approved
1	AMD. #1 - MINOR REVISION	19 JUL 01	DRC/RAL

Revisions

Designed By: KEW
Drawn By: MRC
Checked By: DRC
Reviewed By: RAL
Date: MAY 2001
Scale: AS SHOWN
Project Code: 1-LI-3-1/67
Solicitation Number: DACW25-01-B-0012

U.S. ARMY ENGINEER DISTRICT CORPS OF ENGINEERS ROCK ISLAND, ILLINOIS

ILLINOIS WATERWAY ENVIRONMENTAL MANAGEMENT PROGRAM LA GRANGE POOL, CHAUMONT OPERATIONS AND MAINTENANCE

MISCELLANEOUS REPAIRS

Sheet Reference Number: S300
Sheet 56 of 84

02-MAR-2005 14:54
wwwrdfs#c0054#projects#EP52#QAM Manual - Use this one#ep52s300.dgn

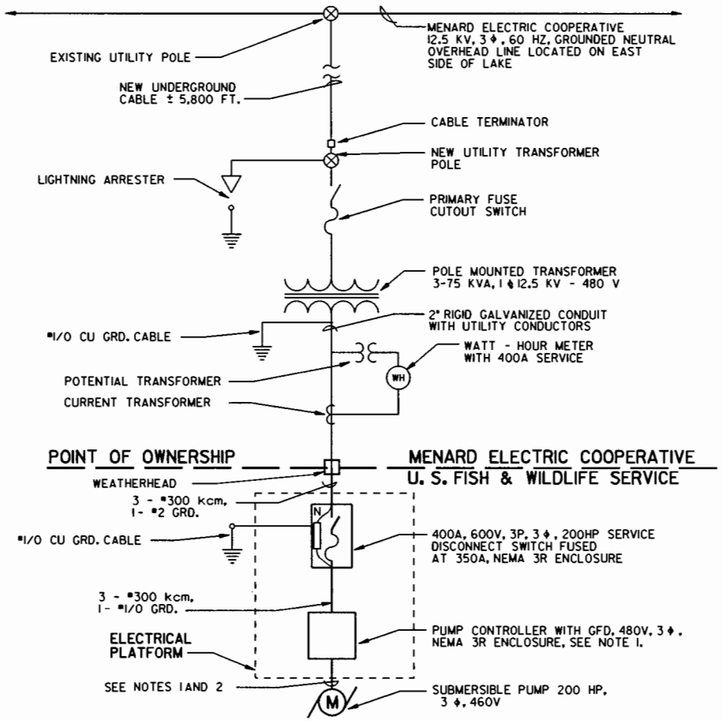

ONE - LINE DIAGRAM OF PUMP STATION POWER SERVICE

NOTES:

1. PUMP MANUFACTURER TO FURNISH PUMP CONTROLLER AND CABLES BETWEEN PUMP CONTROLLER AND PUMP MOTOR.
2. NO SPLICES SHALL BE MADE TO PUMP MANUFACTURER SUPPLIED POWER OR CONTROL CABLES.
3. UNDERGROUND CONDUITS SHALL BE WRAPPED WITH A PLASTIC TAPE OR FACTORY APPLIED PLASTIC RESIN TO PREVENT CORROSION.
4. FOR PLATFORM ASSEMBLY DETAIL, SEE SHEET S210.
5. THE CONTRACTOR SHALL COORDINATE WITH MENARD ELECTRIC COOPERATIVE AND IS RESPONSIBLE FOR PAYMENT TO MENARD ELECTRIC FOR ACCOMPLISHMENT OF MENARD ELECTRIC WORK. SUCH PAYMENT SHALL BE INCLUDED IN THE CONTRACTOR'S BID. SEE SPECIAL CLAUSE H-27. FOR MENARD ELECTRIC POINT OF CONTACT, P. O. BOX 279, 122 SOUTH SIXTH STREET, PETERSBURG, ILLINOIS 62675-0279, JOHN WHITEHURST (217/632-7746) OR (800/872-1203)
6. ALL SAFETY GROUNDING AND LIGHTNING GROUNDING SYSTEMS SHALL BE BONDED TOGETHER AT THE GROUND RODS ONLY.

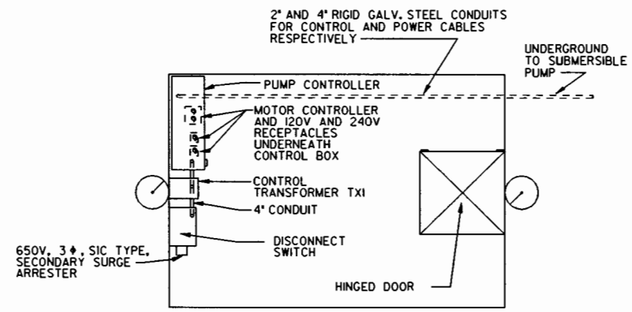

ELEVATED WOOD PLATFORM ASSEMBLY PLAN

NOT TO SCALE

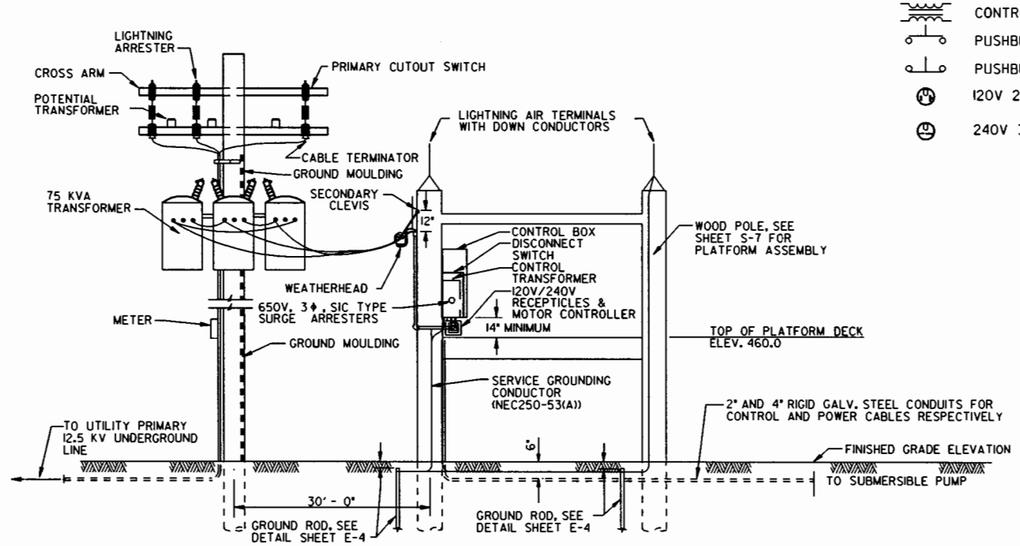

UTILITY TRANSFORMER POLE AND PLATFORM ASSEMBLY

NOT TO SCALE

CONTRACTOR TO FURNISH AND INSTALL THE FOLLOWING:

1. ELEVATED WOOD PLATFORM ASSEMBLY
2. GROUND RODS AND CONNECTIONS
3. SERVICE DISCONNECT SWITCH
4. PUMP CONTROLLER WITH NEMA 3R RECEPTACLE
5. POWER AND CONTROLS FROM CONTROLLER TO PUMP
6. LIGHTNING AIR TERMINALS
7. SERVICE ENTERANCE SHALL BE COORDINATED IN ACCORDANCE WITH MENARD ELECTRIC COOPERATIVE STANDARDS.
8. SECONDARY CLEVIS
9. WEATHERHEAD AND RIGID CONDUIT TO DISCONNECT

MENARD ELECTRIC COOPERATIVE TO FURNISH AND INSTALL THE FOLLOWING:

1. PRIMARY CABLE TO NEW UTILITY POLE
2. 3- 167 KVA TRANSFORMERS
3. CABLE TERMINATORS
4. LIGHTNING ARRESTERS
5. PRIMARY FUSED CUTOUT SWITCHES
6. GROUND WIRE, GROUND ROD AND CONNECTION
7. STAND OFF BRACKET AND U-CLAMPS OR CROSS ARMS
8. METER AND METER SOCKET
9. SECONDARY WIRING TO SERVICE DISCONNECT SWITCH
10. CURRENT AND POTENTIAL TRANSFORMERS

ELECTRICAL LEGEND

OL'S	OVER LOAD PROTECTION		AUTO TRANSFORMER
	THERMAL PROTECTION	CR	CONTROL RELAY COIL
	MOTOR SEAL PROTECTION	TR	TIME DELAY RELAY COIL
GFD	GROUND FAULT DETECTOR	M	MOTOR STARTER COIL
	FLOAT SWITCH, CLOSE ON RISE		GROUNDING CONNECTION
R	PILOT LIGHT WITH INDICATED LENS R=RED, GR=GREEN, A=AMBER	TDD	TIME DELAY DE-ENERGIZE
	NORMALLY OPEN CONTACT		FUSE
	NORMALLY CLOSED CONTACT		CIRCUIT BREAKER
	FUSIBLE DISCONNECT SWITCH		
	RATED FUSE		
	THERMAL OVERLOAD		
	CONTROL TRANSFORMER		
	PUSHBUTTON NORMALLY OPEN, MOMENTARY TYPE		
	PUSHBUTTON NORMALLY CLOSED, MOMENTARY TYPE		
	120V 20A DUPLEX GFCI RECEPTACLE		
	240V 30A SIMPLEX RECEPTACLE		

US Army Corps of Engineers Rock Island District

Symbol	Description	Date	Approved
1	CONTROL SYSTEM AND OTHER MINOR REVISIONS	18 AUG 92	

Revisions

Designed By: CJA
Drawn By: HDG
Checked By: DNR
Reviewed By: DJH
Date: MAR 1999
Scale: AS SHOWN
Drawing Code: 1-L1-3-1/67
Solicitation Number: DACW25-97-B-0032

U.S. ARMY ENGINEER DISTRICT CORPS OF ENGINEERS ROCK ISLAND, ILLINOIS

ILLINOIS WATERWAY
ENVIRONMENTAL MANAGEMENT PROGRAM
LA GRANGE POOL, MILE 124 TO 129.5
LAKE CHAUTAUQUA
OPERATIONS AND MAINTENANCE

LINE DIAGRAM AND LEGEND

Sheet Reference Number:
E10
Sheet 57 of 84

02-MAR-2005 15:07

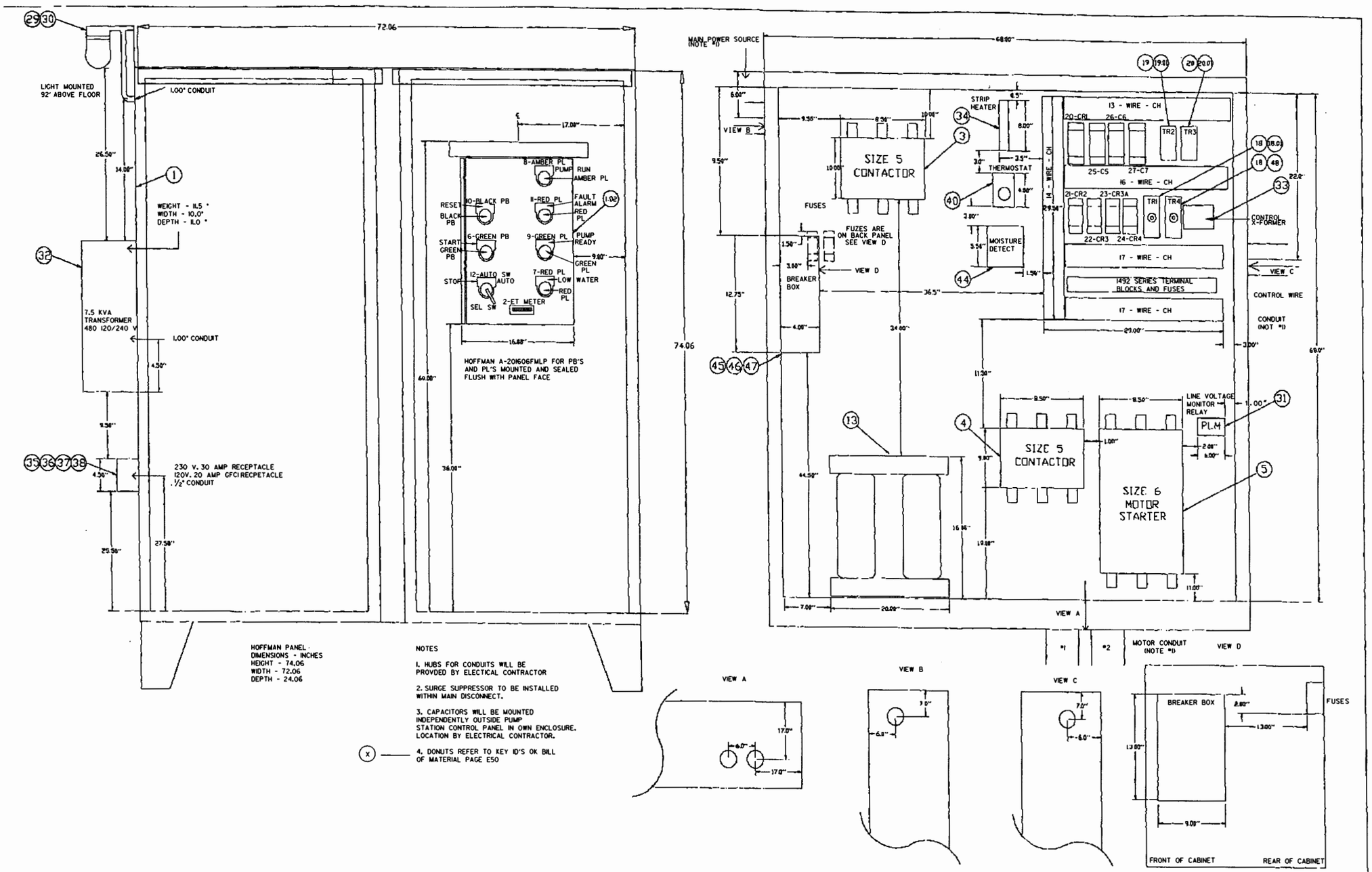

HOFFMAN PANEL DIMENSIONS - INCHES
HEIGHT - 74.06
WIDTH - 72.06
DEPTH - 24.06

NOTES

1. HUBS FOR CONDUITS WILL BE PROVDED BY ELECTRICAL CONTRACTOR

2. SURGE SUPPRESSOR TO BE INSTALLED WITHIN MAIN DISCONNECT.

3. CAPACITORS WILL BE MOUNTED INDEPENDENTLY OUTSIDE PUMP STATION CONTROL PANEL IN OWN ENCLOSURE. LOCATION BY ELECTRICAL CONTRACTOR.

(X) — 4. DONUTS REFER TO KEY ID'S OK BILL OF MATERIAL PAGE E50

Sym	Revision	By	Date
A	Added Dimensions	M.P.	5/3/97
B	Change Dimensions	S.A.	9/12/97
C	Misc. Changes	S.A.	3/2/98
D	RESTART DELAY	L.R.	5/98

Vendor Dwg. #-

ARMY CORP OF ENG.
LAKE CHAUTAUQUA
Generic- PUMP STATION CONTROL PANEL
Specific- PANEL LAYOUT DRAWINGS
Dwg. Size- | Plot Factor- | Dwg. By- D.M.M.
Eng. - | Date- 3/2/95 | Cust. Eng. -
Cust. Dwg. #-
E-1

Data Link Systems Inc.
Contractors \ Engineers
P.O.Box 5586 Peoria, Il.
Ph.#637-0888 Zip 61601-5586

US Army Corps of Engineers Rock Island District

Symbol	Description	Date	Approved
	SEE REVISION TABLE		

Revisions

Designed By: | Dates: APR 2001
Drawn By: DWP | Scale: AS SHOWN
Checked By: DRC | Drawing Code: 1-L1-3-1/67
Reviewed By: RAL | Solicitation Number: DACW25-97-B-0032

U.S. ARMY ENGINEER DISTRICT CORPS OF ENGINEERS ROCK ISLAND, ILLINOIS

ILLINOIS WATERWAY
ENVIRONMENTAL MANAGEMENT PROGRAM
LA GRANGE POOL - MILE 124 TO 129.5
LAKE CHAUTAUQUA
OPERATIONS AND MAINTENANCE

PUMP STATION CONTROL PANEL

Sheet Reference Number:
E20
Sheet 58 of 84

02-MAR-2005 15:08
Name:d:\projects\lac\e20.dgn - Use this onlaeq52k020.dgn

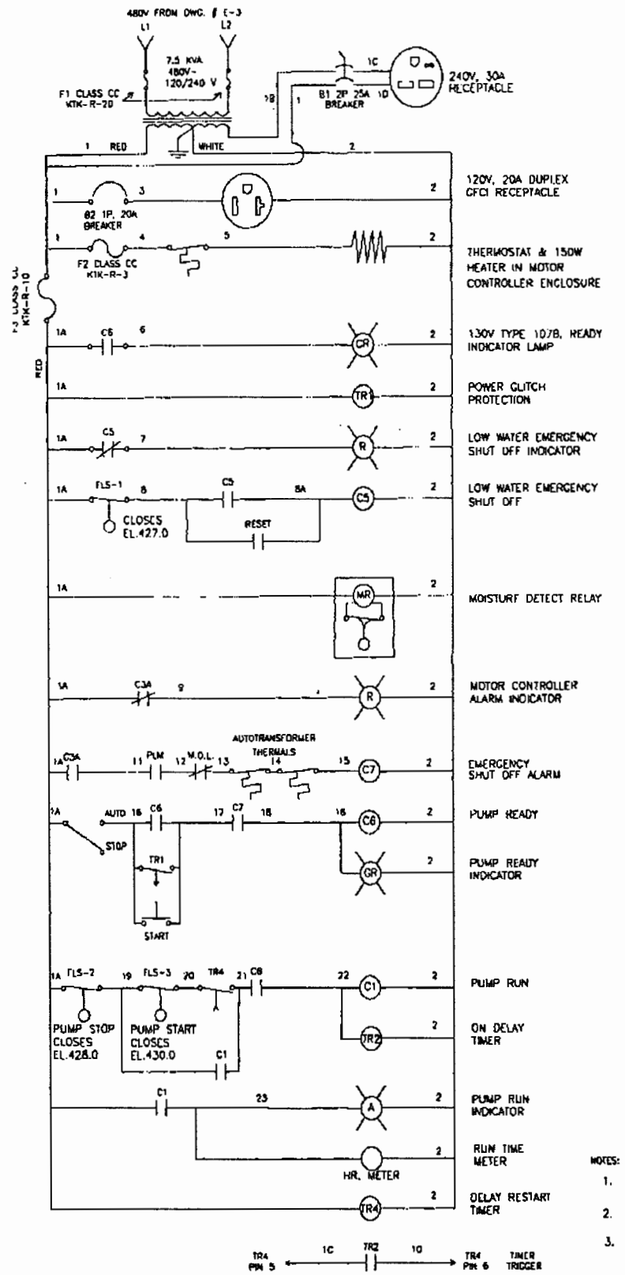

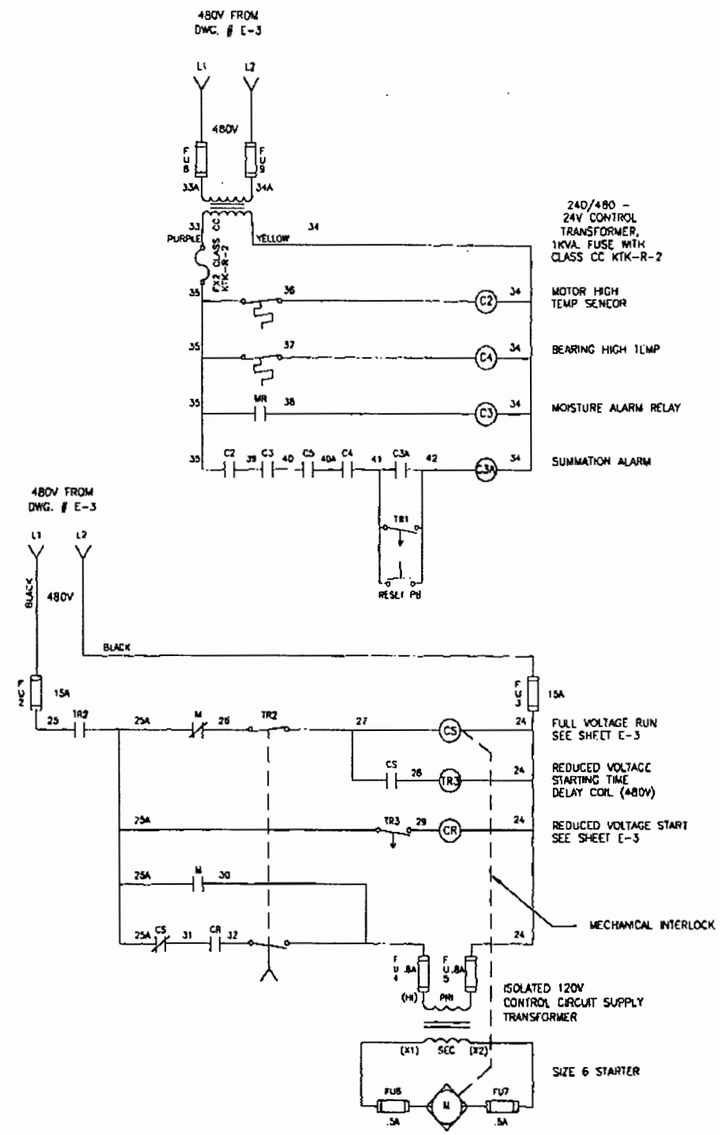

TR1	TIMING RELAY, 120VAC COIL, 1-10 SEC TIME RANGE, ±2% REPEAT ACCURACY, SPST, SET AT 3 SECONDS. RELEASE DELAY CONTACTS AFTER COIL IS DE-ENERGIZED. CONTACTS RESET AFTER COIL IS ENERGIZED. PROVIDE SOCKET TYPE WITH TERMINAL BASE AND RETAINER CLIP.
TR2	TIMING RELAY, 120VAC COIL, CONTACTS INSTANTANEOUSLY CHANGE STATE WHEN COIL IS DE-ENERGIZED. DELAY CHANGE OF STATE WHEN COIL IS ENERGIZED.
TR3	TIMING RELAY, 120VAC COIL, REDUCED VOLTAGE STARTING TIME DELAY SET PER PUMP MANUFACTURER RECOMENDATIONS.
TR4	DELAY RESTART TIMER - SET @ 10 MIN.
C1	RELAY, 120VAC COIL, CONTACTS RATED 20A AT 120V.
C2,C3, C3A,C4	SOCKET RELAY, 24VAC COIL, CONTACTS RATED 10A AT 120V. PROVIDE WITH TERMINAL BASE AND RETAINER CLIP.
C5,C6, C7	RELAY, 120VAC COIL, CONTACTS RATED 10A AT 120V.
CR,CS	RELAY, 480VAC COIL, CONTACTS RATED PER MOTOR STARTER MANUFACTURER.
M.O.L.	MOTOR OVERLOAD CONTACT, WILL OPEN WHEN STARTER OVERLOADS ARE TRIPED
M	MOTOR STARTER, 120VAC COIL, NEMA SIZE 6 CONTACTS RATED AT 480V.
HOUR MTR.	RUN TIME METER, 120VAC, 4 DIGITS MINIMUM.

NOTES:

1. THE 350A FUSES IN THE MAIN DISCONNECT SHALL BE CLASS RK5.
2. THE CONTROL FUSES SHALL BE QUICK DISCONNECT TYPE.
3. PLS REPRESENTS AUTOMATIC RESETTING TYPE PHASE LOSS/VOLTAGE SENSOR.ADJUST TO OPEN CONTROL CIRCUIT WHENEVER ANY PHASE VOLTAGE IS LESS THAN 438 VOLTS.
4. RELAYS C2,C4,C3,C3A & MR ARE SUBSTITUTED FOR THE MOTOR CONTROLLER.
5. BLACK WIRES DENOTE 480 VOLT CIRCUIT. RED & WHITE WIRES DENOTE 120 VOLT CIRCUIT. PURPLE & YELLOW WIRES DENOTE 24 VOLT CIRCUIT.
6. REASON FOR M.O.L. LOCATION IS M.O.L. IS ONLY RATED FOR 3 AMPS. C7 IS RATED AT HIGHER AMPERAGE (10 AMPS) TO ALLOW SHUTING SYSTEM DOWN.
7. TR4 DELAY RESTART

PUMP CONTROL ELEMENTARY DIAGRAM

Data Link Systems Inc.
Contractors \ Engineers
P.O.Box 5566 Peoria,Il.
Ph.#637-0865 Zip 61601-5566

Sym	Revision	By	Date
A	M.O.L. Revision	S.A.	5/28/97
B	Misc. Revisions	S.A.	3/11/98
C	RESTART DELAY	L.R.	5/98

ARMY CORP OF ENG.
LAKE CHAUTAUQUA
General- PUMP CONTROLLER
Specific- ELEMENTARY DIAGRAM
Dwg. Size- | Plot Factor- | Dwg. by-
Eng.- | Date- | Cust. Eng.-
Cust. Dwg #-
Revisor Dwg #-

E-2

US Army Corps of Engineers Rock Island District

Symbol	Description	Date	Approved
SEE REVISION TABLE			

Revisions

Dated: APR 2001
Designed By: | Scale: AS SHOWN
Drawn By: DWP | Drawing Code: 1-L1-3-1/67
Checked By: DRC | Solicitation Number: DACW25-97-B-0032
Reviewed By: RAL

U.S. ARMY ENGINEER DISTRICT CORPS OF ENGINEERS ROCK ISLAND, ILLINOIS

ILLINOIS WATERWAY
ENVIRONMENTAL MANAGEMENT PROGRAM
LA GRANGE POOL, MILE 124 TO 129.5
LAKE CHAUTAUQUA
OPERATIONS AND MAINTENANCE
PUMP CONTROLLER ELEMENTARY DIAGRAM

Sheet Reference Number:
E30
Sheet 59 of 84

02-MAR-2005 15:08
emerdatacddprojects$PS240M manual - Use this on$ms52630.dgn

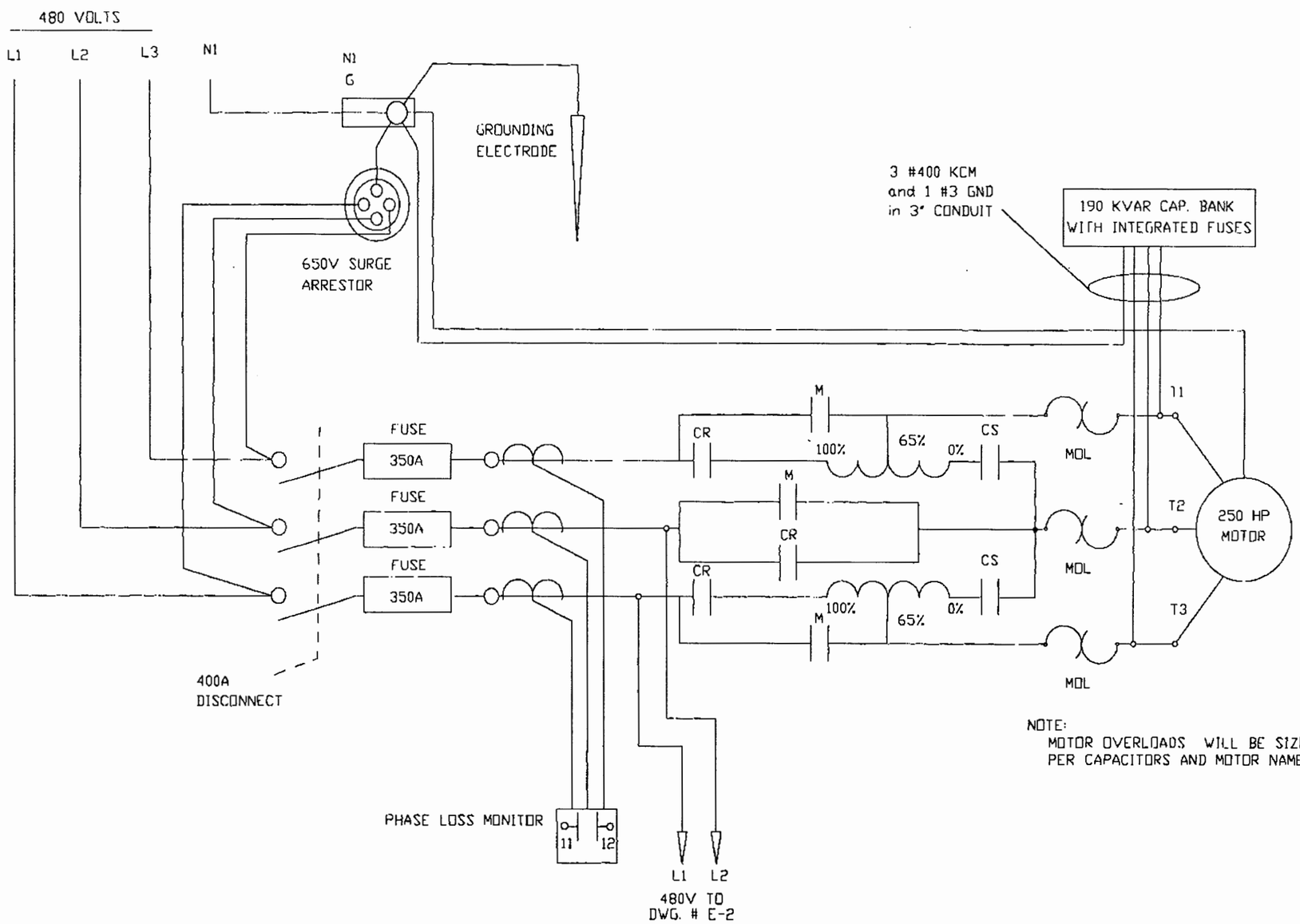

NOTE:
MOTOR OVERLOADS WILL BE SIZED PER CAPACITORS AND MOTOR NAMEPLATE

Data Link Systems Inc.
Contractors \ Engineers
P.O.Box 5586 Peoria,Il.
Ph.#637-0888 Zip 61601-5566

Sym	Revision	By	Date

ARMY CORP OF ENG.
LAKE CHAUTAUQUA
Project: PUMP STATION CONTROL PANEL
Specific: PANEL LAYOUT DRAWINGS
Dwg. Size: D | Plot Factor: | Dwg. by: D.M.M.
Eng.: | Date: 4-19-94 | Cust. Eng.:
Cust. Dwg.:
Vendor Dwg.:

E-3

US Army Corps of Engineers Rock Island District

Symbol	Description	Date	Approved

Revisions

Designed By:
Drawn By: DWP
Checked By: DRC
Reviewed By: RAL
Date: APR 2001
Scale: AS SHOWN
Drawing Code: 1-L1-3-1/67
Solicitation Number: DACW25-97-B-0032

U.S. ARMY ENGINEER DISTRICT
CORPS OF ENGINEERS
ROCK ISLAND, ILLINOIS

ILLINOIS WATERWAY
ENVIRONMENTAL MANAGEMENT PROGRAM
LA GRANGE POOL, MILE 124 TO 129.5
LAKE CHAUTAUQUA
OPERATIONS AND MAINTENANCE

PANEL LAYOUT DRAWINGS

Sheet Reference Number:
E40
Sheet 60 of 84

02-MAR-2005 15:06
Model: E40-Sheet-Panel Layout - Use this onlaunch52x40.dgn

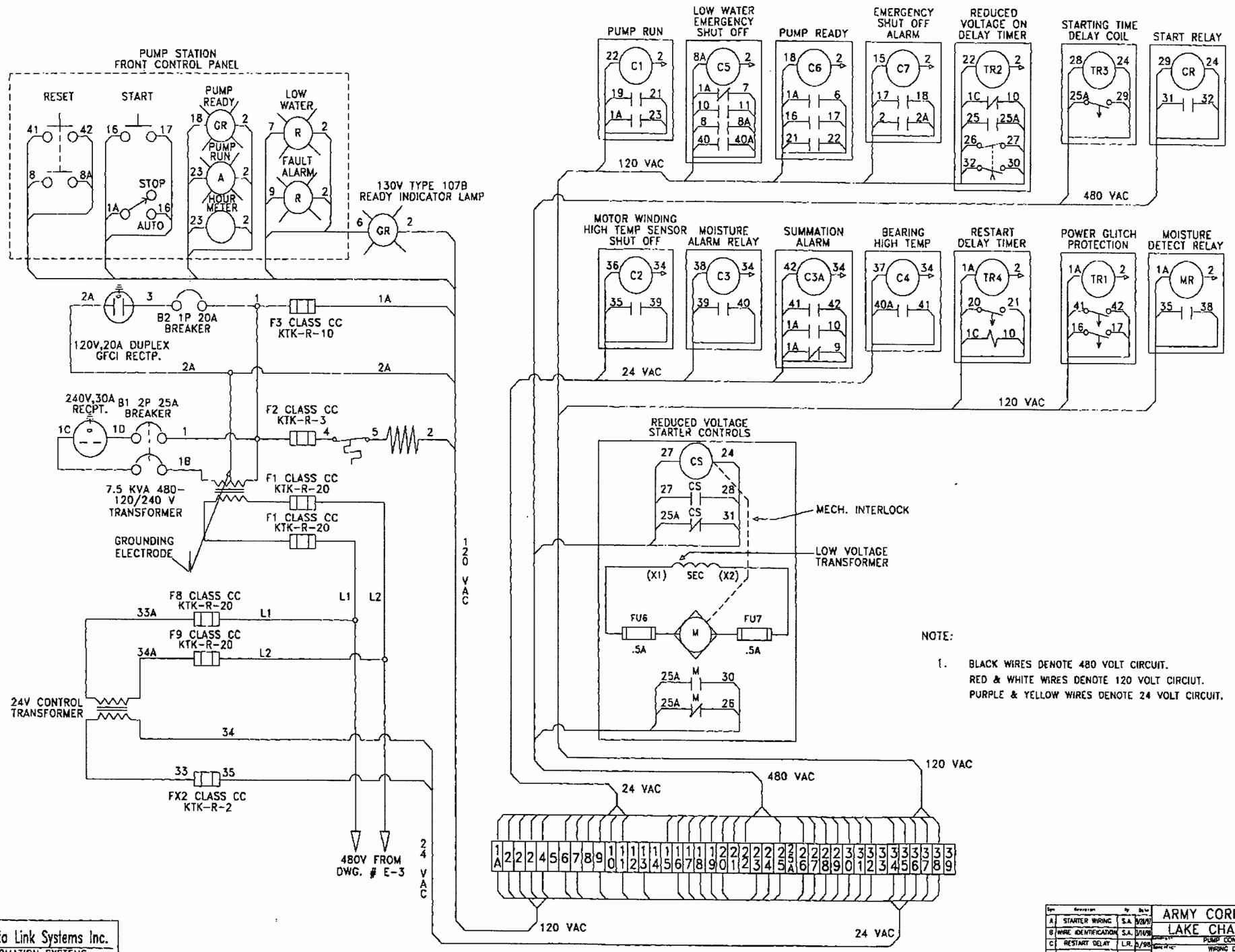

NOTE:

1. BLACK WIRES DENOTE 480 VOLT CIRCUIT.
RED & WHITE WIRES DENOTE 120 VOLT CIRCIUT.
PURPLE & YELLOW WIRES DENOTE 24 VOLT CIRCUIT.

US Army Corps of Engineers Rock Island District

Symbol	Description	Date	Approved
SEE REVISION TABLE			

Revisions

Designed By: | Date: APR 2001
Drawn By: DMP | Scale: AS SHOWN
Checked By: DRC | Drawing Code: 1-L1-3-1/67
Reviewed By: RAL | Solicitation Number: DACW25-97-B-0032

U.S. ARMY ENGINEER DISTRICT CORPS OF ENGINEERS ROCK ISLAND, ILLINOIS

ILLINOIS WATERWAY
ENVIRONMENTAL MANAGEMENT PROGRAM
LA GRANGE POOL, MILE 124 TO 129.5
OPERATIONS AND MAINTENANCE

PUMP CONTROLLER WIRING DIAGRAM

Sheet Reference Number:
E50
Sheet 61 of 84

Sym	Revision	By	Date
A	STARTER WIRING	S.A.	9/28/97
B	WIRE IDENTIFICATION	S.A.	1/14/98
C	RESTART DELAY	L.R.	5/98

ARMY CORP OF ENG.
LAKE CHAUTAUQUA
PUMP CONTROLLER
WIRING DIAGRAM
Drawn By: | Plot Factor: | Dwg By: D.K.M.
Chk: | Date: 4-18-94 | Cust. Dwg.:
E-4

Data Link Systems Inc.
AUTOMATION SYSTEMS
P.O.Box 5586 Peoria,IL
Ph.(637-9888 Zip 61601-5586

02-MAR-2005 15:09
Mnr:#18:Acad:Dwg:Sc1:Sc1:E-PS2:MOAM Manual - Use this cadtmp52a050.dgn

BILL OF MATERIAL

KEY ID	QTY	CATALOG NUMBER	DEV ID	DESCRIPTION MANUFACTURER
1	1	A-74H60DULP		2 DOOR NEMA 4 HOFFMAN
1.01	1	A72P60		MOUNTING PLATE HOFFMAN
1.02	1	A-201606FMLP		NEMA 12 FLUSH MOUNT ENCLOSURE W/SWING OUT DOOR HOFFMAN
1.03	1	A-DK20SS	DRIP	20" NEMA 4 DRIP SHIELD HOFFMAN
1.04	1	A-DK30SS	DRIP	30" NEMA 4 DRIP SHIELD KIT HOFFMAN
1.05	1	A-DK30SS	DRIP	30" NEMA 4 DRIP SHIELD KIT HOFFMAN
2	1	779536-201	ET METER	ELAPSED TIME METER 120VAC 6-DIGIT VEEDER-ROOT
3	1	8502-SG02V06	CR	SIZE 5 CONTACTOR SQUARE D
4	1	8502-SG02V06	CS	SIZE 5 CONTACTOR SQUARE D
5	1	8536-SH02V06	M	SIZE 6 STARTER SQUARE D
6	1	9001-SKR1GH5	START	GREEN PB SQ D
7	1	9001-SKR1RH5	LOW WTR	RED NEMA 4 PILOT LIGHT 120VAC SQ D
8	1	9001-SKP1A31	PUMP RUN	AMBER PILOT LIGHT NEMA 4 SQ D
9	1	9001-SKP1G31	PUMP READY	GRN NEMA 4 PILOT LIGHT 120VAC SQ D
10	1	9001-SKP1R31	RESET	BLACK PB SQ D
11	1	9001-SKP1R31	FAULT ALARM	RED NEMA 4 PILOT LIGHT 120VAC SQ D
12	1	9001-SKS11FBH1	AUTO SW	NEMA 4X 2-POS SEL SW WITH CONTACT BLOCK SQ D
13	1	AUTOTRANSFOMER	TRANS	SIZE 6 SQUARE D
14	1	WIRE-CHANNEL		3in wide X 22 7/16in long X 3in deep
15	1	WIRE-CHANNEL		3in wide X 24 1/16in long X 3in deep
16	1	WIRE-CHANNEL		3in wide X 23 9/16in long X 3in deep
17	2	WIRE-CHANNEL		3in wide X 22 13/16in long X 3in deep
18	1	8501-NR51		TIMING RELAY BASE SQUARE D
18.01	1	9050-JCK11-V20	TR1	120 VOLT AC TIMING RELAY 0-10 SEC. SQUARE D
19	1	8501-NR51		TIMING RELAY BASE SQUARE D
19.01	1	9050-A012E	TR2	120 VOLT AC TIMING RELAY 1 SEC. TO 3 MIN. SQUARE D
20	1	8501-NR51		TIMING RELAY BASE SQUARE D
20.01	1	9050-A010D	TR3	440 VOLT AC TIMING RELAY 1 SEC. TO 3 MIN. SQUARE D
20.02	3	NH7		TIMER RETAINING STRAPS SQUARE D
21	1	8501-NR82	C2	KU RELAY BASE SQUARE D
21.01	1	KU12-V14		24 VOLT AC 10 AMP RELAY SQUARE D
22	1	8501-NR82	C3	KU RELAY BASE SQUARE D
22.01	1	KU12-V14		24 VOLT AC 10 AMP RELAY SQUARE D
23	1	8501-NR82	C3A	KU RELAY BASE SQUARE D
23.01	1	KU12-V14		24 VOLT AC 10 AMP RELAY SQUARE D
24	1	8501-NR82	C4	KU RELAY BASE SQUARE D
24.01	1	KU12-V14		24 VOLT AC 10 AMP RELAY SQUARE D
24.02	4	NH2		CLASS 8501 RETAINING STRAP SQUARE D
25	1	8501-X020-V02	C5	DPDT NEMA RELAY 120V AC SQUARE D

BILL OF MATERIAL

KEY ID	QTY	CATALOG NUMBER	DEV ID	DESCRIPTION MANUFACTURER
26	1	8501-X020-V02	C6	DPDT NEMA RELAY 120V AC SQUARE D
27	1	8501-X020-V02	C7	DPDT NEMA RELAY 120V AC SQUARE D
28	1	8501-XM020-V02	C1	DPDT NEMA MASTER RELAY 120VAC SQUARE D
29	1	JBW-1G		MOUNTING UNILET FOR LIGHT APPLETON
30	1	VU-100		LIGHT ADAPTER GLOBE AND GAURD APPLETON
31	1	813S-V08	PLM	LINE VOLTAGE MONITOR RELAY ALLEN-BRADLEY
32	1	7S40F		7.5KVA, SINGLE PHASE 480 120/240V SQUARE D
33	1	9070-E02-D2		SQUARE D 240V/480V-24V TRANSFORMER
34	1	S-815/120		OMEGALUX STRIP HEATER
35	1	RCVJ-GFR		HUBBELL GFCI COVER
36	1	RCVJ-PR		SINGLE RECEPTECALE COVER
37	1	5372		LEVITON 30AMP 250V RECEPTECALE
38	1	GF5352		HUBBELL 20A 125V GFCI RECEPETECALE
39	2	FS		APPLETON CAST BOX WITH HUB
40	1	T451A2007		HONEYWELL LINE VOLTAGE THERMOSTAT
41	1	3110-H365NR		SQURE D FUSIBLE DISCONNECT
42	1	190 KVAR		GE GEM POWER CAPACITOR
43	1	SP3650		SQURE D SURGE ARRESTOR
44	1	TYPE 2810 FORM 1H1	MOISTURE DETECT	PUMP MOISTURE DETECTOR WARRICK CONTROLS
45	1	QD6-122100		SERIES G3 TYPE 1 ENCLOSURE SQUARE D
46	1	TYPE QD 2 POLE	B1	25A, 2 POLE CIRCUIT BREAKER SQUARE D
47	1	TYPE QD 120/240	B2	20A 1 POLE CIRCUIT BREAKER SQUARE D
48	1	9050-JCK26-V20	TR4	120 VOLT AC OFF DELAY TIMING RELAY 0-10 MIN. SQUARE D

Data Link Systems Inc.
Contractors \ Engineers
P.O.Box 5566 Peoria,Il.
Ph.#637-0886 Zip 61601-5566

Sym	Revision	By	Date
A	MISC. REVISIONS	S.W.A.	3/20/98
B	RESTART DELAY	L.R.	5/98

Vendor Dwg #-

ARMY CORP OF ENG.
LAKE CHAUTAUQUA

Project- PUMP STATION CONTROL PANEL
Specific- PANEL LAYOUT DRAWINGS
Dwg Size- D | Plot Factor- | Dwg by- D.N.M
Eng - | Date- 4-19-94 | Cust Eng -
Cust Dwg #-

E-5

US Army Corps of Engineers
Rock Island District

Symbol	Description	Date	Approved
SEE REVISIONS TABLE	Revisions		

Designed By:
Drawn By: DWP
Checked By: DRC
Reviewed By: RAL
Date: APR 2001
Scale: AS SHOWN
Drawing Code: 1-L-1-3-1/67
Solicitation Number: DACW25-97-B-0032

U.S. ARMY ENGINEER DISTRICT
CORPS OF ENGINEERS
ROCK ISLAND, ILLINOIS

ILLINOIS WATERWAY
ENVIRONMENTAL MANAGEMENT PROGRAM
LA GRANGE POOL, MILE 124 TO 129.5
LAKE CHAUTAUQUA
OPERATIONS AND MAINTENANCE

BILL OF MATERIAL

Sheet Reference Number:
E60
Sheet 62 of 84

02-MAR-2005 15:09
wmurr@RIDOM\Projects\EP52\OM Manual - Use this onlep52e060.dgn

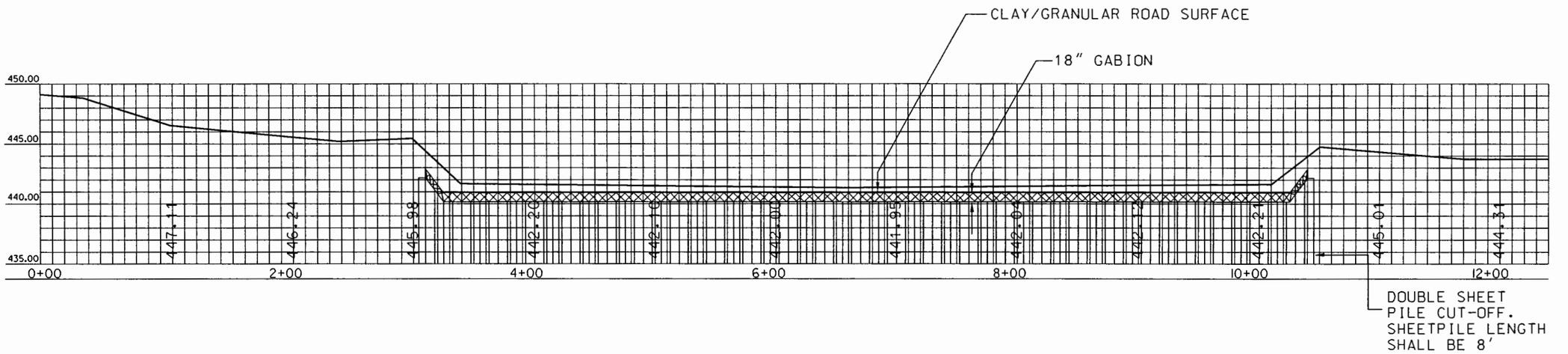

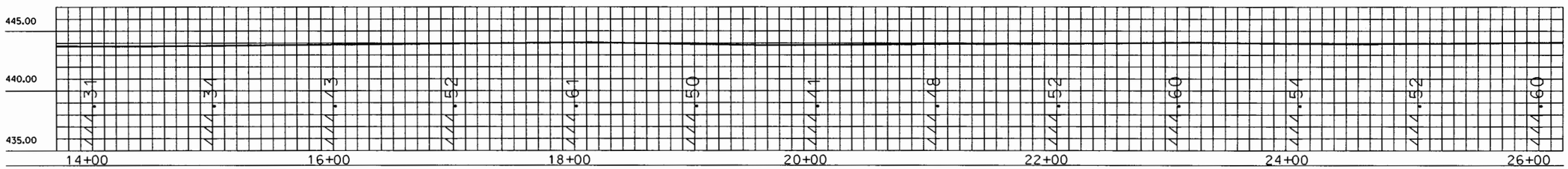

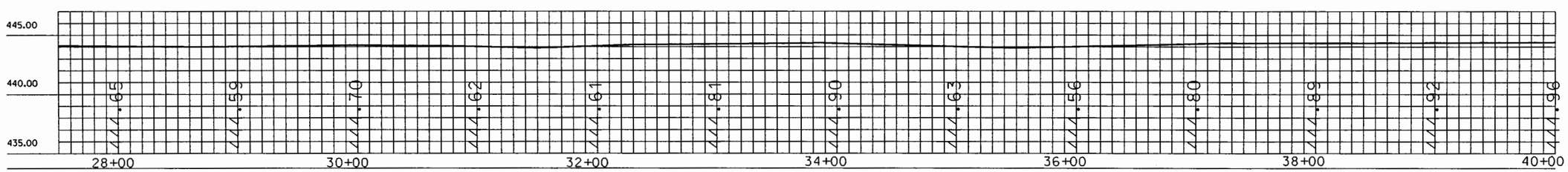

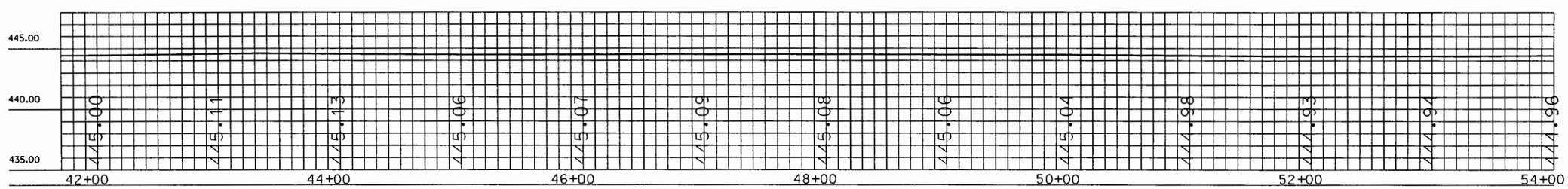

NOTE:

USFWS CONSTRUCTED THE LOWER LAKE LEVEE IMPROVEMENT.
USACE DEVELOPED AS-BUILTS FROM AUGUST 2000 GPS SURVEY.

US Army Corps of Engineers Rock Island District

Symbol	Description	Date	Approved
	AS CONSTRUCTED		

Revisions

U.S. ARMY ENGINEER DISTRICT CORPS OF ENGINEERS ROCK ISLAND, ILLINOIS

Designed By: USFWS
Drawn By: DWP
Checked By: DRC
Reviewed By: RAL
Date: MAR 1999
Scale: AS SHOWN
Drawing Code: 1-L1-3-1/67
Solicitation Number: DACW25-97-B-0032

ILLINOIS WATERWAY
ENVIRONMENTAL MANAGEMENT PROGRAM
LA GRANGE POOL, MILE 124 TO 129.5
LA GRANGE LAKE CHANNEL
OPERATIONS AND MAINTENANCE

LOWER LAKE
LEVEE PROFILES
0+00 F - 54+00 F

Sheet Reference Number:
F180
Sheet 63 of 84

02-MAR-2005 15:10
mmc:/d50/projects/ecs/EP52/OGM Manual - Use this cadmap32180.dgn

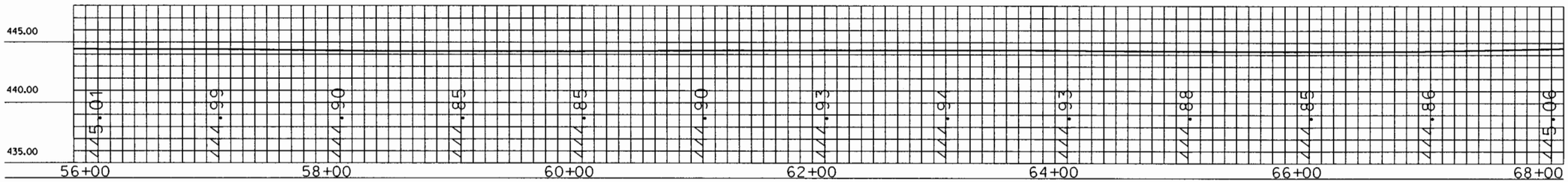

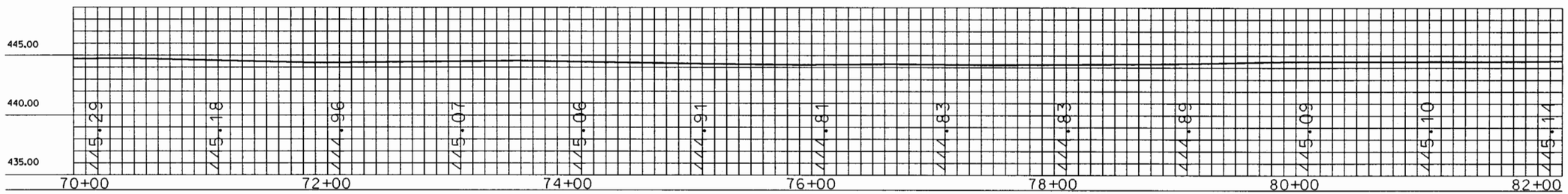

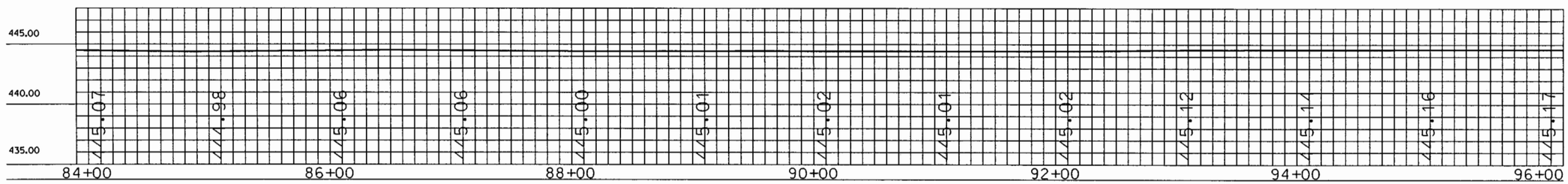

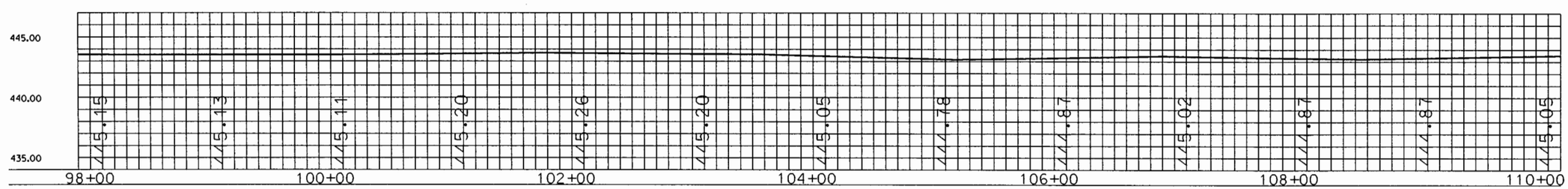

US Army Corps of Engineers
Rock Island District

Symbol	Description	Date	Approved
	Revisions		

AS CONSTRUCTED

Designed By: USFWS
Drawn By: DWP
Checked By: DRC
Reviewed By: RAL
Date: MAR 1999
Scale: AS SHOWN
Drawing Code: 1-L1-3-1/67
Solicitation Number: DACW25-97-B-0032

U.S. ARMY ENGINEER DISTRICT
CORPS OF ENGINEERS
ROCK ISLAND, ILLINOIS

ILLINOIS WATERWAY
ENVIRONMENTAL MANAGEMENT PROGRAM
LA GRANGE POOL - MILE 124 TO 129.5
LAKE CHAUTAUQUA
OPERATIONS AND MAINTENANCE

LOWER LAKE
LEVEE PROFILES
56+00 F - 110+00 F

Sheet Reference Number:
F190
Sheet 64 of 84

02-MAR-2005 15:11
water/ofs#00008pr0/acts#EP52#OGM Manual - Use this and#0521190.dgn

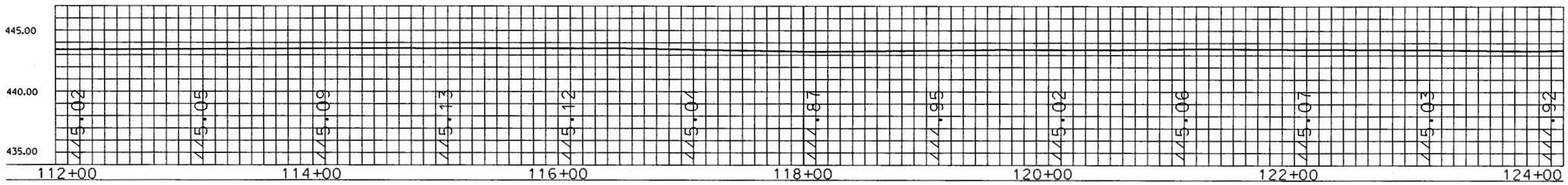

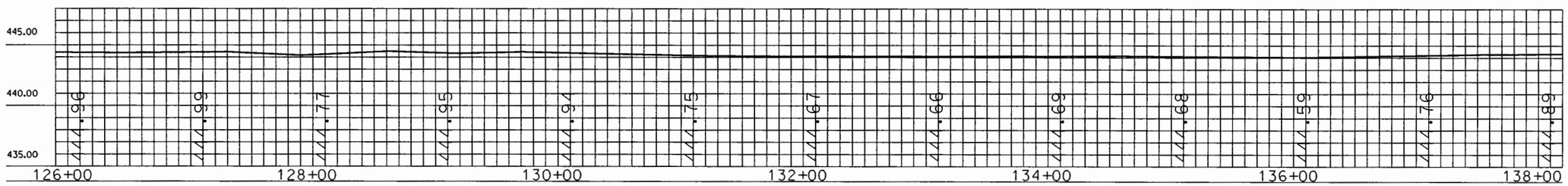

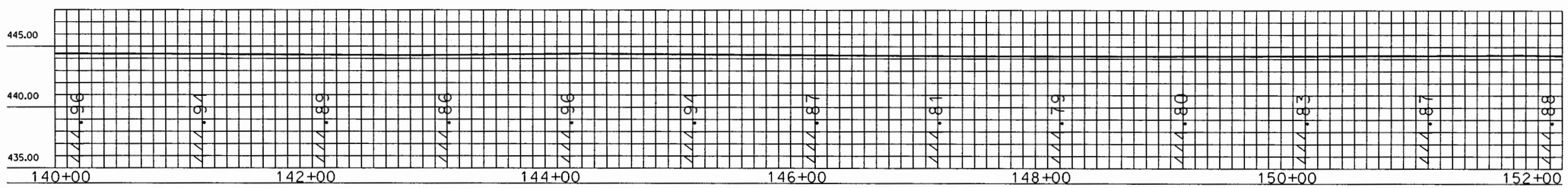

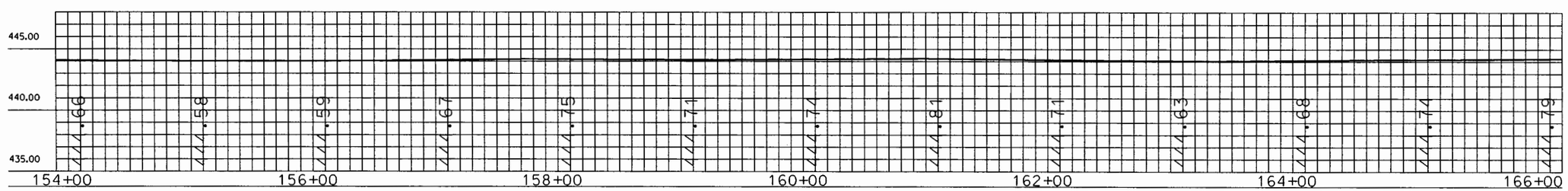

US Army Corps of Engineers
Rock Island District

Symbol	Description	Date	Approved
	AS CONSTRUCTED		

Revisions

Designed By: USFWS
Drawn By: DWP
Checked By: DRC
Reviewed By: RAL
Date: MAR 1999
Scale: AS SHOWN
Drawing Code: 1-L1-3-1/67
Solicitation Number: DACW25-97-B-0032

U.S. ARMY ENGINEER DISTRICT
CORPS OF ENGINEERS
ROCK ISLAND, ILLINOIS

ILLINOIS WATERWAY
ENVIRONMENTAL MANAGEMENT PROGRAM
LA GRANGE POOL, MILE 124 TO 129.5
LAKE CHAUTAUQUA
OPERATIONS AND MAINTENANCE

LOWER LAKE
LEVEE PROFILES
112+00 F – 166+00 F

Sheet Reference Number:
F200
Sheet 65 of 84

02-MAR-2005 15:11
emarr d:\MicroStation\Projects\EPS2\DGN Manual - Use this one\eps32200.dgn

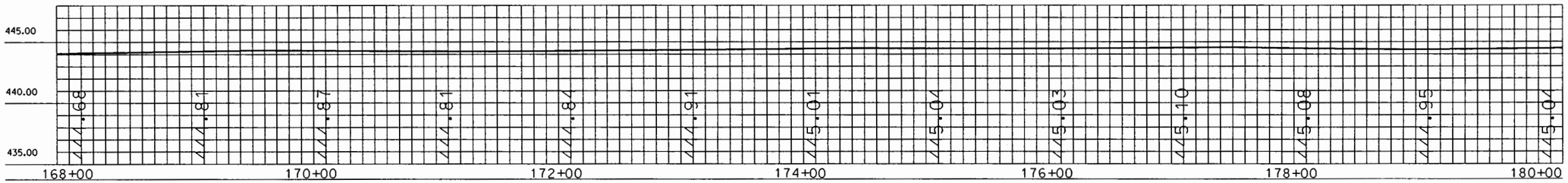

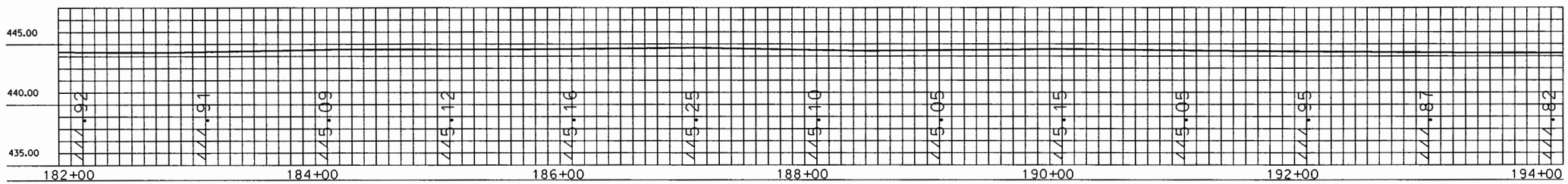

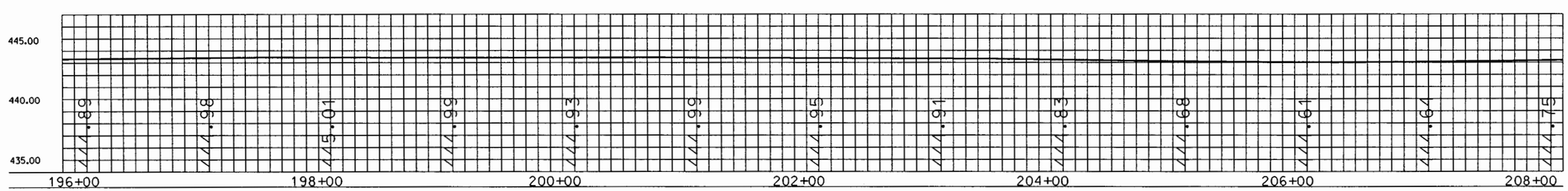

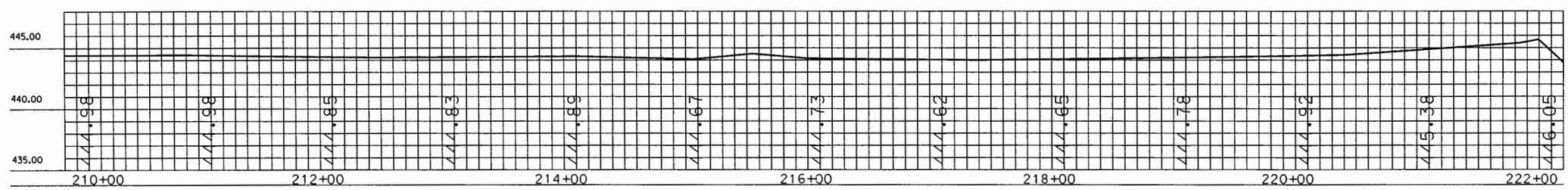

US Army Corps of Engineers
Rock Island District

Symbol	Description	Date	Approved
	AS CONSTRUCTED		

Revisions

Designed By: USFWS
Drawn By: DWP
Checked By: DRC
Reviewed By: RAL
Date: MAR 1999
Scale: AS SHOWN
Drawing Code: 1-1-1-3-1/67
Solicitation Number: DACW25-97-B-0032

U.S. ARMY ENGINEER DISTRICT
CORPS OF ENGINEERS
ROCK ISLAND, ILLINOIS

ILLINOIS WATERWAY
ENVIRONMENTAL MANAGEMENT PROGRAM
LA GRANGE POOL, MILE 124 TO 129.5
LAKE CHAUTAUQUA
OPERATIONS AND MAINTENANCE

LOWER LAKE
LEVEE PROFILES
168+00 F – 222+00 F

Sheet Reference Number:
F210
Sheet 66 of 84

02-MAR-2005 15:11
emmr/d1e0000p/projects#EP52#OAM Manual - Use this on#ep52f210.dgn

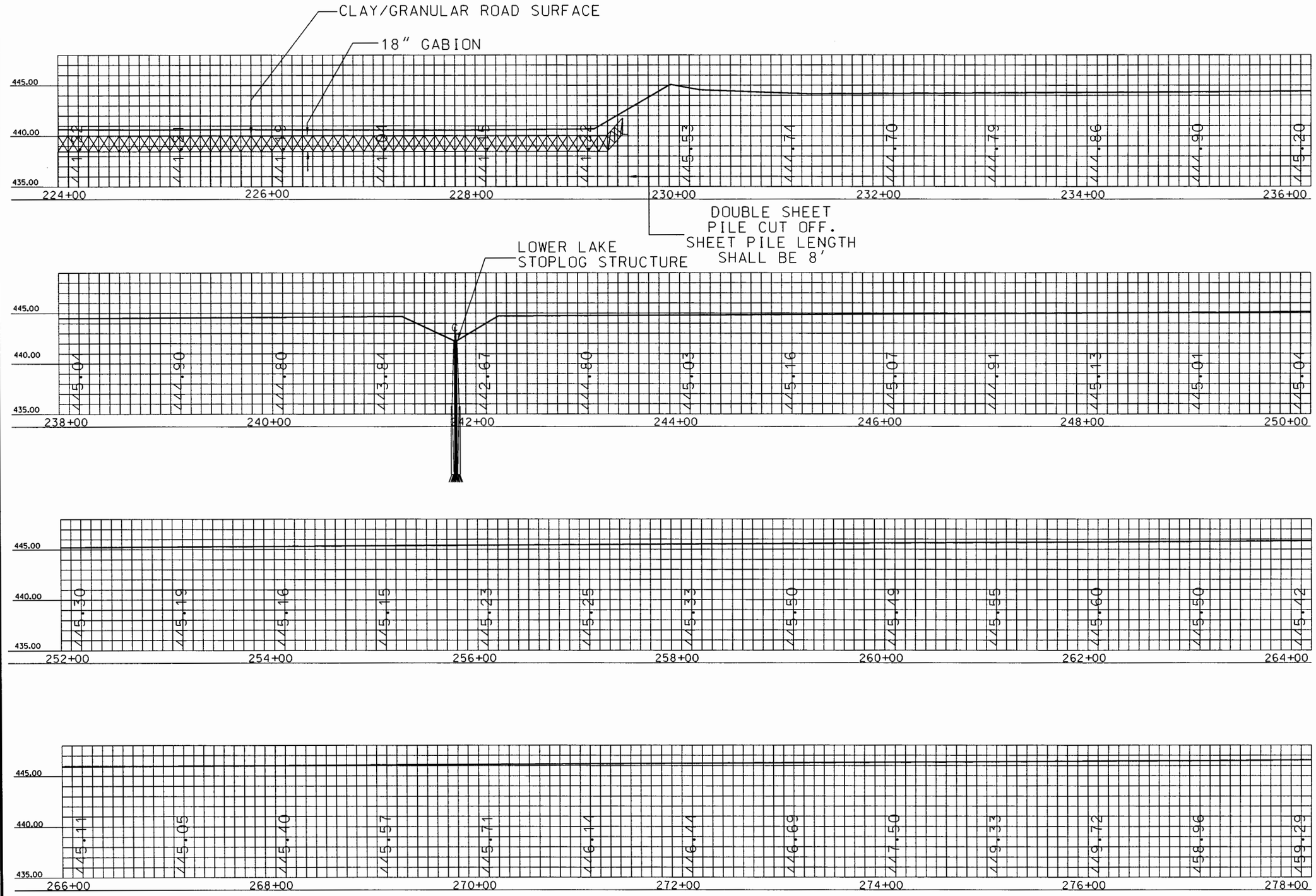

US Army Corps of Engineers
Rock Island District

Symbol	Description	Date	Approved
	AS CONSTRUCTED		

Revisions

U.S. ARMY ENGINEER DISTRICT
CORPS OF ENGINEERS
ROCK ISLAND, ILLINOIS

Designed By: USFWS	Date: MAR 1999		
Drawn By: DWP	Scale: AS SHOWN		
Checked By: DRC	Drawing Code: 1-L1-3-1/67		
Reviewed By: RAL	Solicitation Number: DACW25-97-B-0032		

ILLINOIS WATERWAY
ENVIRONMENTAL MANAGEMENT PROGRAM
LA GRANGE POOL, MILE 124 TO 129.5
LAKE CHAUTAUQUA
OPERATIONS AND MAINTENANCE

LOWER LAKE
LEVEE PROFILES
224+00 F - 278+00 F

Sheet Reference Number:
F220
Sheet 67 of 84

02-MAR-2005 15:11
mmorrdfs&0000pro|ects#EPS2#OM Manual - Use this ondwg522220.dgn

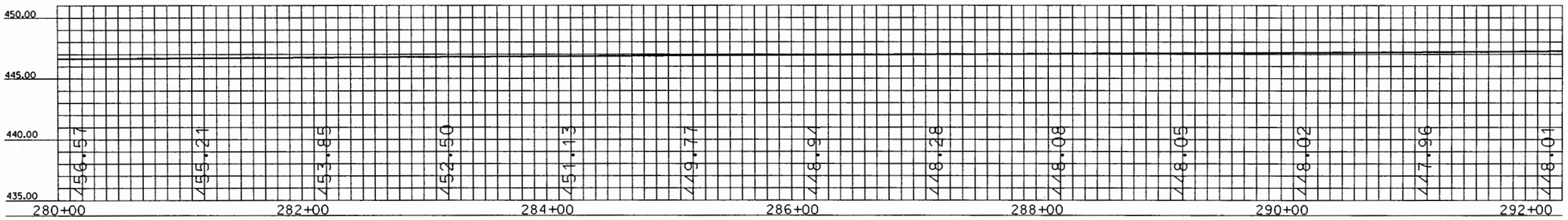

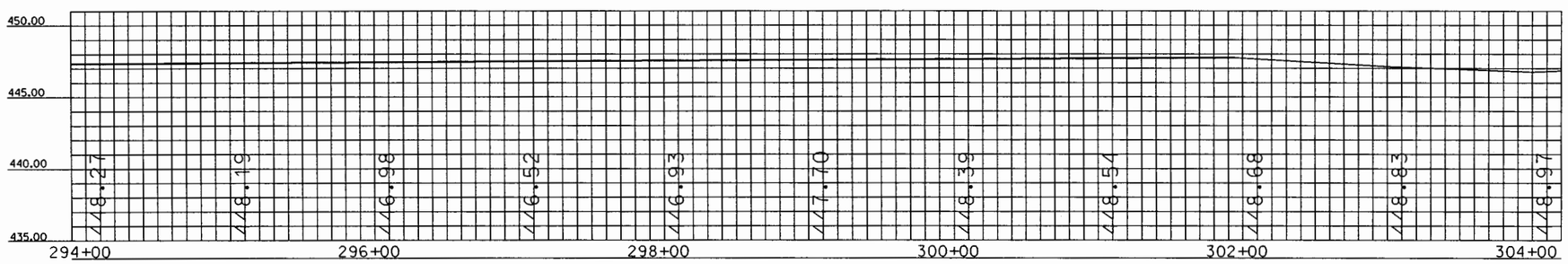

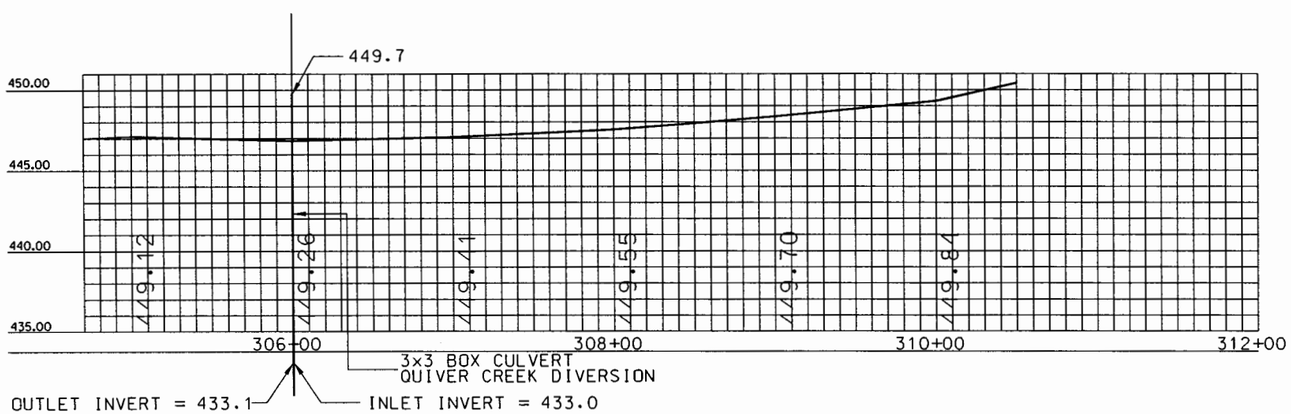

US Army Corps of Engineers
Rock Island District

Symbol	Description	Date	Approved
	AS CONSTRUCTED		

Revisions

U.S. ARMY ENGINEER DISTRICT
CORPS OF ENGINEERS
ROCK ISLAND, ILLINOIS

Designed By:	USFWS	Date:	MAR 1999
Drawn By:	DWP	Scale:	AS SHOWN
Checked By:	DRC	Drawing Code:	1-L1-3-1/67
Reviewed By:	RAL	Solicitation Number:	DACW25-97-B-0032

ILLINOIS WATERWAY
ENVIRONMENTAL MANAGEMENT PROGRAM
LA GRANGE POOL, MILE 124 TO 129.5
LAKE CHAUTAUQUA
OPERATIONS AND MAINTENANCE
LOWER LAKE
LEVEE PROFILES
280+00 F - 312+00 F

Sheet Reference Number:
F230
Sheet 68 of 84

02-MAR-2005 15:12
mmordfsecoddsrp/projects/EPS2HDM Manual - Use this cell/eps52230.dgn

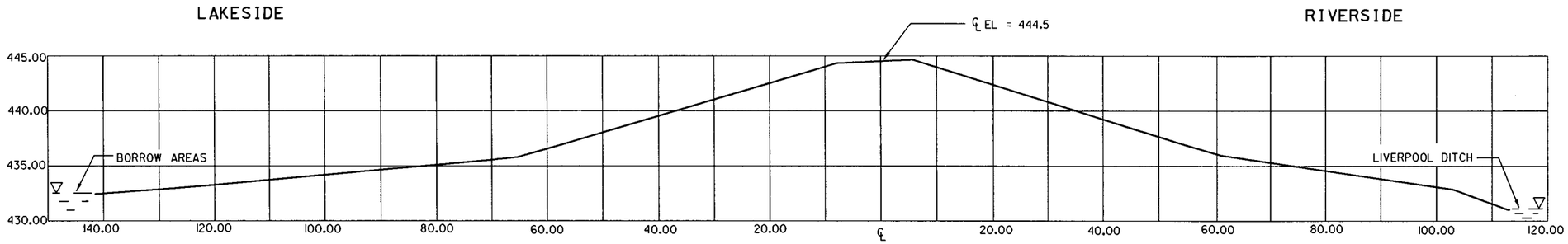

STA = 124+95 F

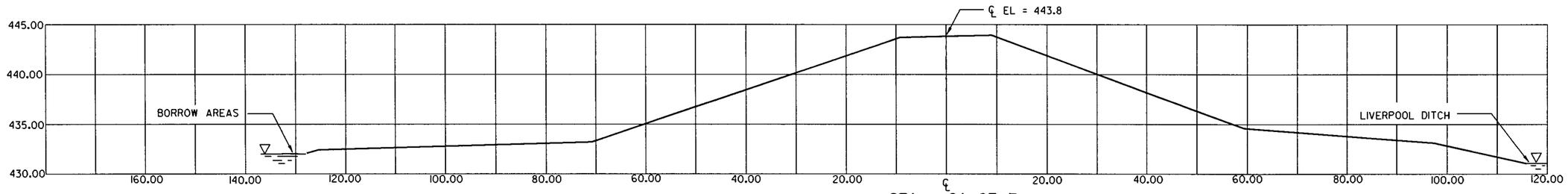

STA = 91+67 F

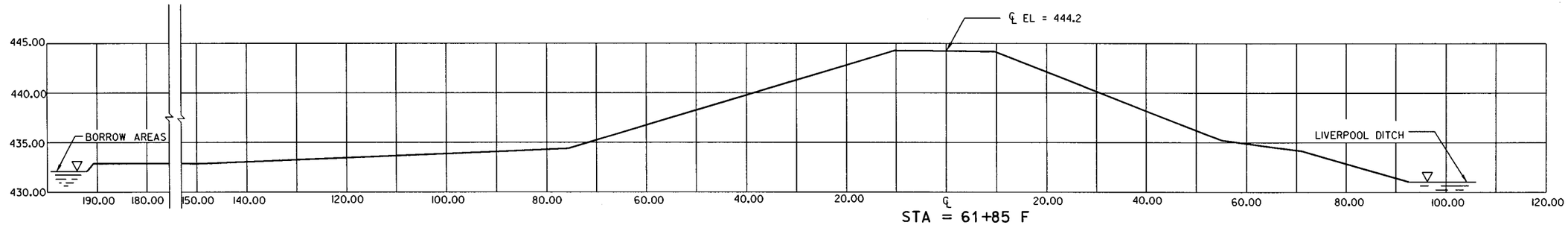

STA = 61+85 F

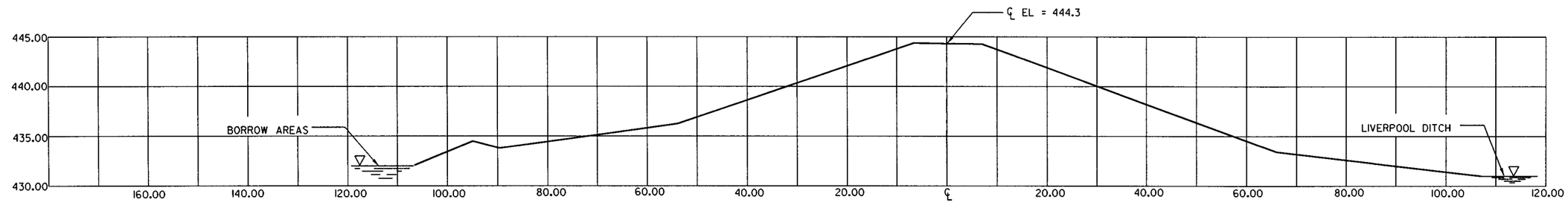

STA = 31+25 F

REFERNECE:
1. SEE SHEET F 250 FOR NOTES.

US Army Corps of Engineers
Rock Island District

Symbol	Description	Date	Approved
	AS CONSTRUCTED		

Revisions

Designed By: USFWS
Drawn By: DWP
Checked By:
Reviewed By:
Date: OCT 2000
Scale: AS SHOWN
Drawing Code: 1-L1-3-1/67
Solicitation Number:

U.S. ARMY ENGINEER DISTRICT
CORPS OF ENGINEERS
ROCK ISLAND, ILLINOIS

ILLINOIS WATERWAY
ENVIRONMENTAL MANAGEMENT PROGRAM
LA GRANGE POOL - MILE 124 TO 129.5
OPERATIONS AND MAINTENANCE

LOWER LAKE
CROSS SECTIONS I

Sheet Reference Number:
F240
Sheet 69 of 84

02-MAR-2005 13:12
Name:d:\0\0000001\acts\mEP52\Dwg Manual - Use this cadmap52240.dgn

LAKESIDE RIVERSIDE

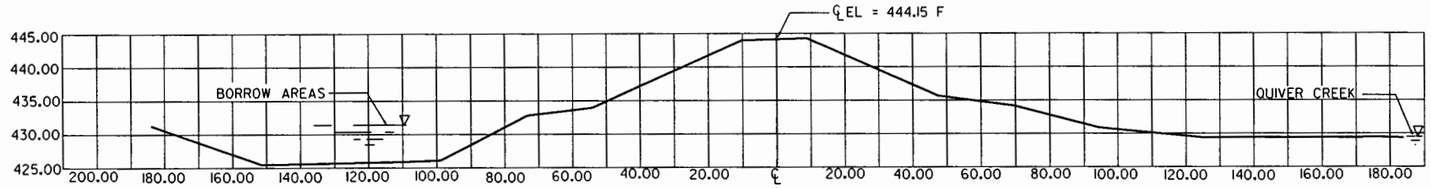

STA = 255+52 F

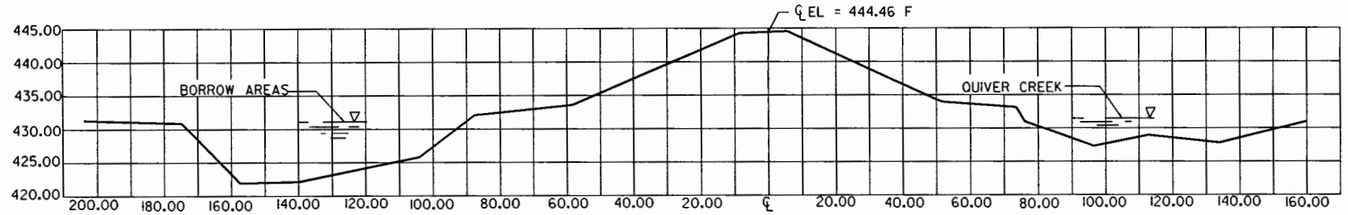

STA = 234+65 F

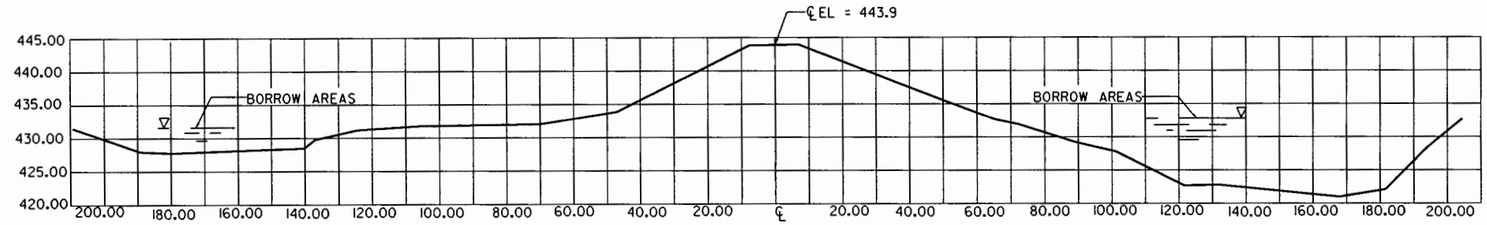

STA = 205+06 F

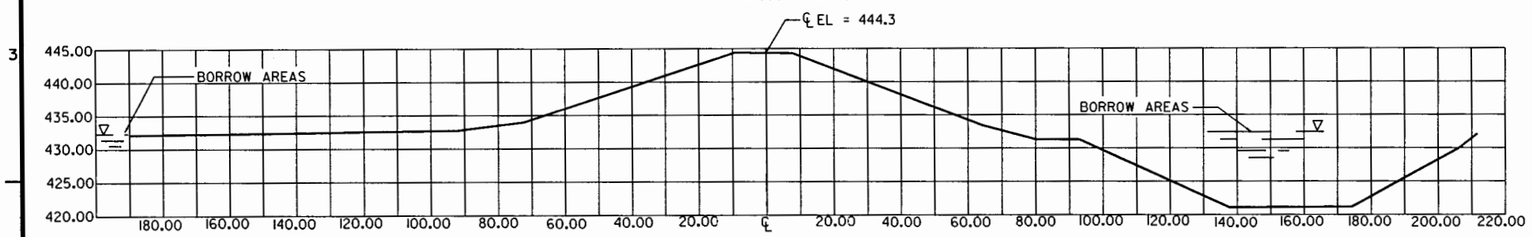

STA = 181+30 F

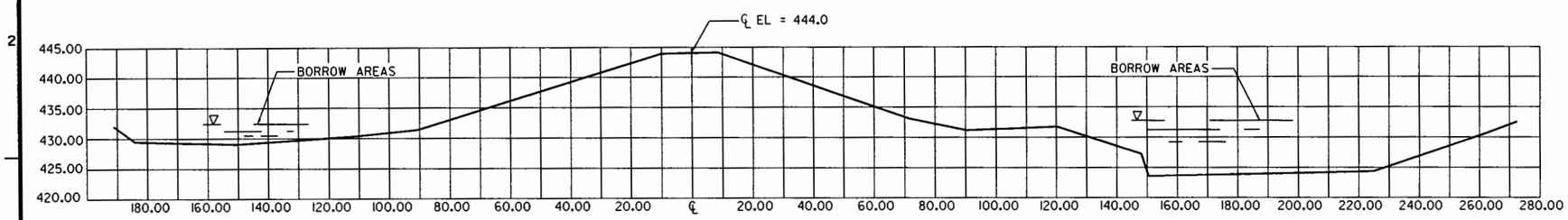

STA = 162+86 F

NOTES:

1. 15-16 AUG 00, ROCK ISLAND DISTRICT, CORPS OF ENGINEERS COMPLETED A GPS SURVEY OF THE LOWER LAKE LEVEE. THE SURVEY INCLUDED A LEVEE PROFILE AND THE 9 SECTIONS SHOWN HERE.

2. THE USFWS CONSTRUCTED THE LOWER LAKE LEVEE AND THE 2 OVERFLOW STRUCTURES. THE FWS STAFF COMPLETED MOST OFTHE CONSTRUCTION. SOME OF THE WORK WAS CONTRACTED.

3. THE LEVEE WAS CONSTRUCTED PRIMARILY ON THE EXISTING LEVEE. HOWEVER, THE SETBACK LEVEE FROM STATION 130+00 F, TO STATION 215+00 F, WAS CONTRACTED ON THE LAKE BOTTOM.

4. THE LOWER LAKE LEVEE IS CAPPED WITH AN 8 INCH CAP ROCK AND CHOKED WITH GRANULAR SURFACING. THE FWS SEEDED THE LEVEE SIDE SLOPES.

5. SEE SHEET X30 FOR LOCATION OF SECTIONS.

US Army Corps of Engineers Rock Island District

Symbol	Description	Date	Approved
	AS CONSTRUCTED		

Revisions

Designed By: USFWS
Drawn By: DWP
Checked By:
Reviewed By:
Date: OCT 2000
Scale: AS SHOWN
Drawing Code: 1-1-3-1/67
Solicitation Number:

U.S. ARMY ENGINEER DISTRICT
CORPS OF ENGINEERS
ROCK ISLAND, ILLINOIS

ILLINOIS WATERWAY
ENVIRONMENTAL MANAGEMENT PROGRAM
LA GRANGE POOL, MILE 124 TO 129.5
LAKE CHAUTAUQUA
OPERATIONS AND MAINTENANCE

LOWER LAKE CROSS SECTIONS II

Sheet Reference Number:
F250
Sheet 70 of 84

02-MAR-2005 15:13

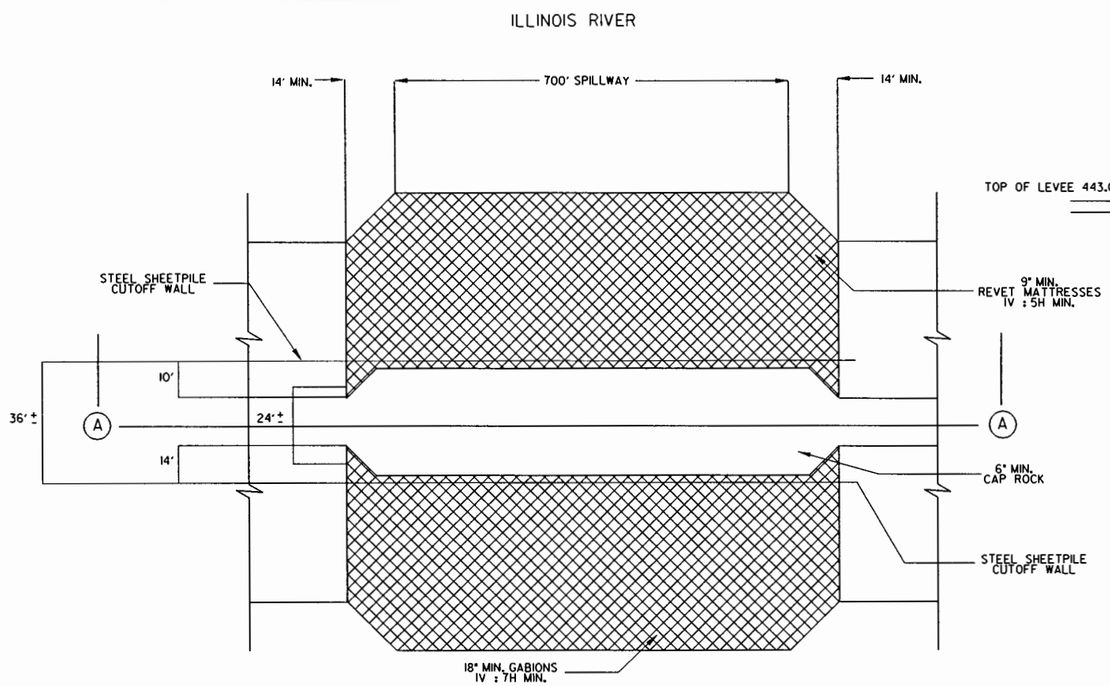

PLAN
SPILLWAY

NO SCALE

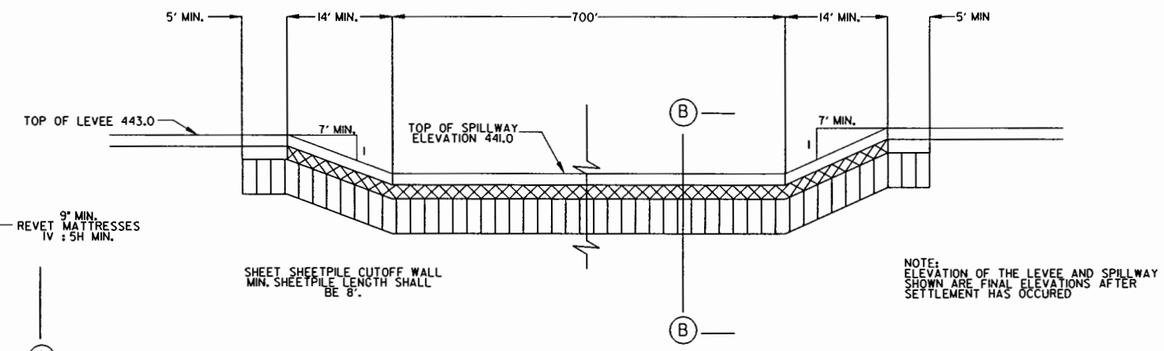

SECTION A-A
SPILLWAY ELEVATION

NO SCALE

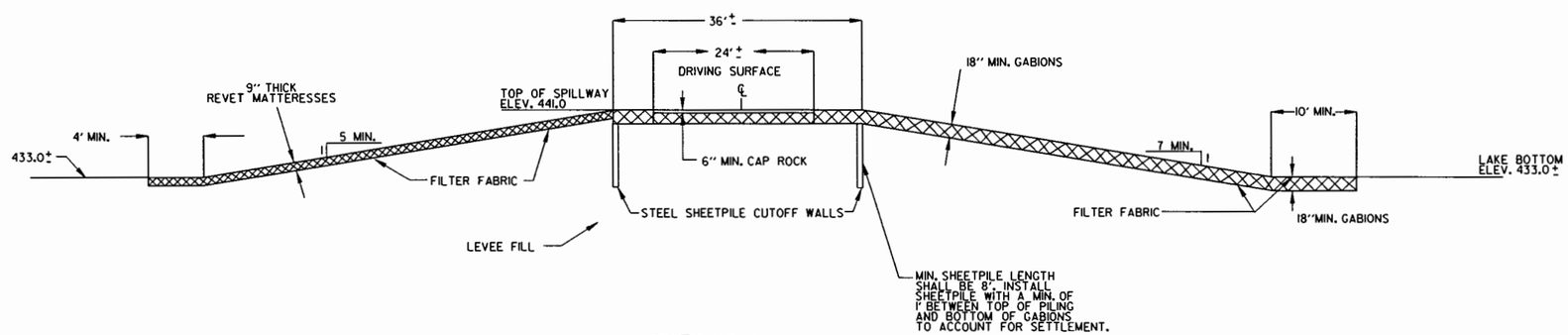

SECTION B-B
SPILLWAY CROSS SECTION

NO SCALE

US Army Corps of Engineers
Rock Island District

Symbol	Description	Date	Approved
	Revisions		

Designed By: USFWS
Drawn By: DWP
Checked By: DRC
Reviewed By: RAL
Date: NOV 2000
Scale: AS SHOWN
Drawing Code: 1-L1-3-1/67
Solicitation Number:

U.S. ARMY ENGINEER DISTRICT
CORPS OF ENGINEERS
ROCK ISLAND, ILLINOIS

ILLINOIS WATERWAY
ENVIRONMENTAL MANAGEMENT PROGRAM
LA GRANGE POOL, MILE 124 TO 129.5
LAKE CHAUTAUQUA
OPERATIONS AND MAINTENANCE

SPILLWAY PLAN AND CROSS SECTIONS

Sheet Reference Number:
F260
Sheet 71 of 84

02-MAR-2005 15:13
emmr/d1e8c0d0/projects/EP32/OGM Manual - Use this on/emp521260.dgn

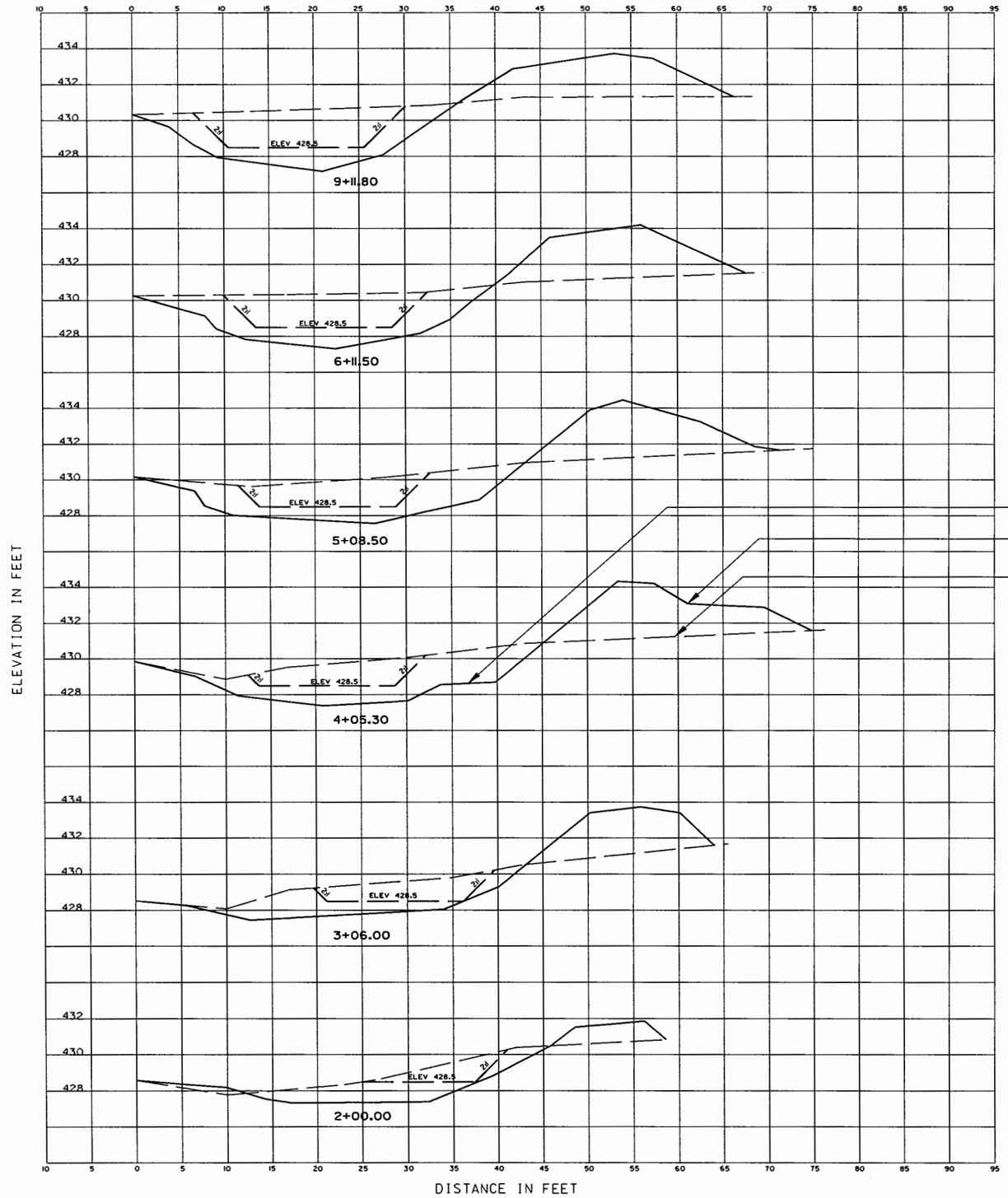

AS BUILT CROSS SECTIONS PROVIDED BY:
RJS CONSTRUCTORS
J. RAMPELBERG
11/24/03

US Army Corps of Engineers
Rock Island District

Symbol	Description	Date	Approved
1	AS BUILT	18 MAR 04	MRP

Revisions

Designed By: DRC
Date: MAR 2001
Drawn By: DWP
Scale: AS SHOWN
Checked By: KNM
Project Code: T-LI-3-1/67
Reviewed By: DRC
Solicitation Number: DACW25-01-B-0012

U.S. ARMY ENGINEER DISTRICT
CORPS OF ENGINEERS
ROCK ISLAND, ILLINOIS

ILLINOIS WATERWAY
ENVIRONMENTAL MANAGEMENT PROGRAM
LA GRANGE LOCK AND DAM TO 129.5
OPERATIONS AND MAINTENANCE

LOWER LAKE DEWATERING CHANNEL CROSS SECTIONS I

Sheet Reference Number:
F270
Sheet 72 of 84

02-MAR-2005 15:13
wemrdfs#cadd#projects#EP52#O&M Manual - Use this one#ep52f270.dgn

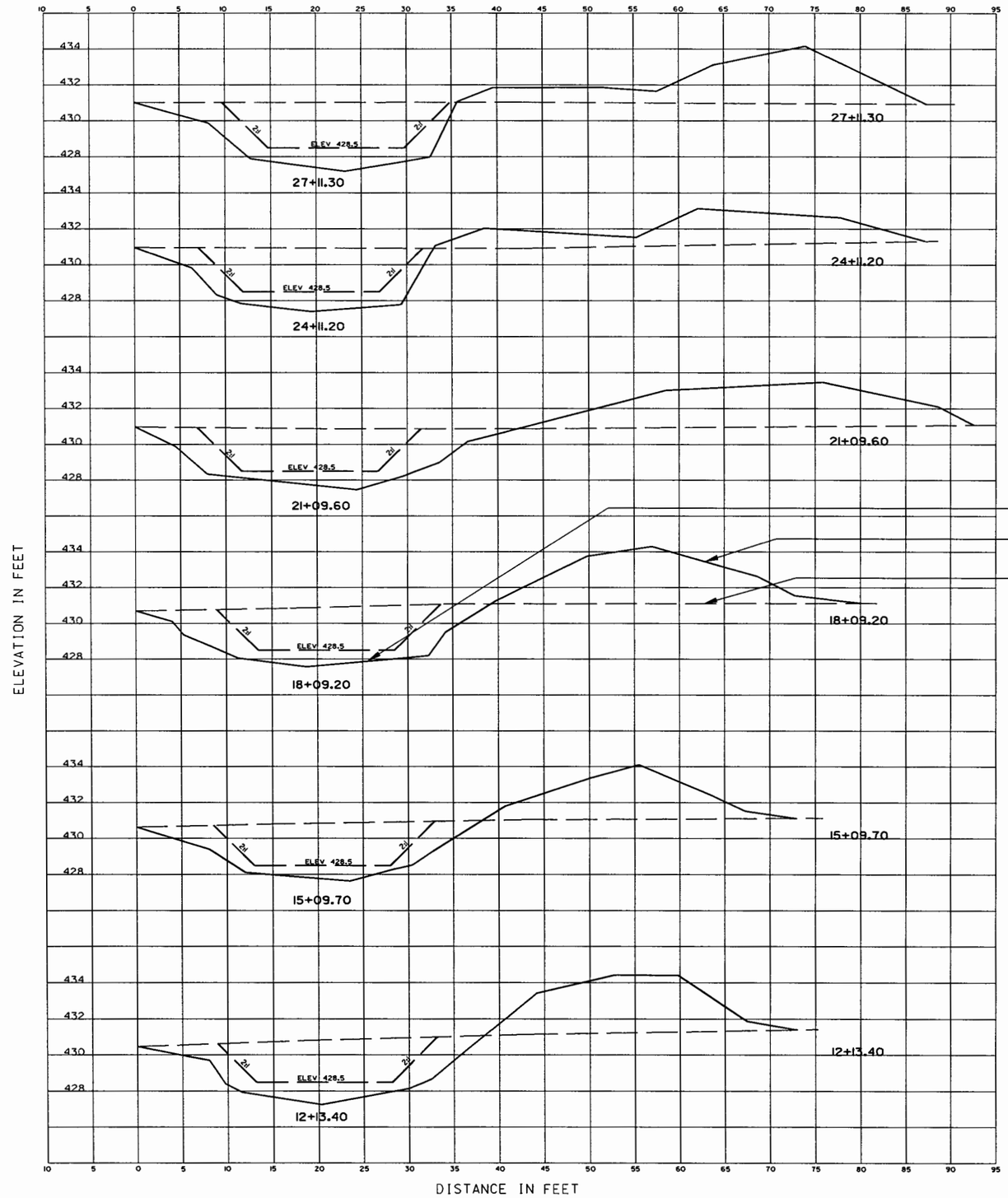

AS BUILT CROSS SECTIONS PROVIDED BY:
RJS CONSTRUCTORS
J. RAMPELBERG
11/24/03

US Army Corps of Engineers
Rock Island District

Symbol	Description	Date	Approved
1	AS BUILT	18 MAR 04	MWP

Revisions

Designed By: DRC
Drawn By: DWP
Checked By: KNM
Reviewed By: DRC
Date: MAR 2001
Scale: AS SHOWN
Project Code: 1-L1-3-1/67
Solicitation Number: DACW25-01-B-0012

U.S. ARMY ENGINEER DISTRICT
CORPS OF ENGINEERS
ROCK ISLAND, ILLINOIS

ENVIRONMENTAL WATERWAY PROGRAM
LA GRANGE POOL MANAGEMENT TO 229.5
LAKE CHAUTAUQUA
OPERATIONS AND MAINTENANCE

LOWER LAKE DEWATERING CHANNEL CROSS SECTIONS II

Sheet Reference Number:
F280
Sheet 72 of 84

02-MAR-2005 15:14
eemvrdfs\acadde\projects\EP52\OAM Manual - Use this one\ep52f280.dgn

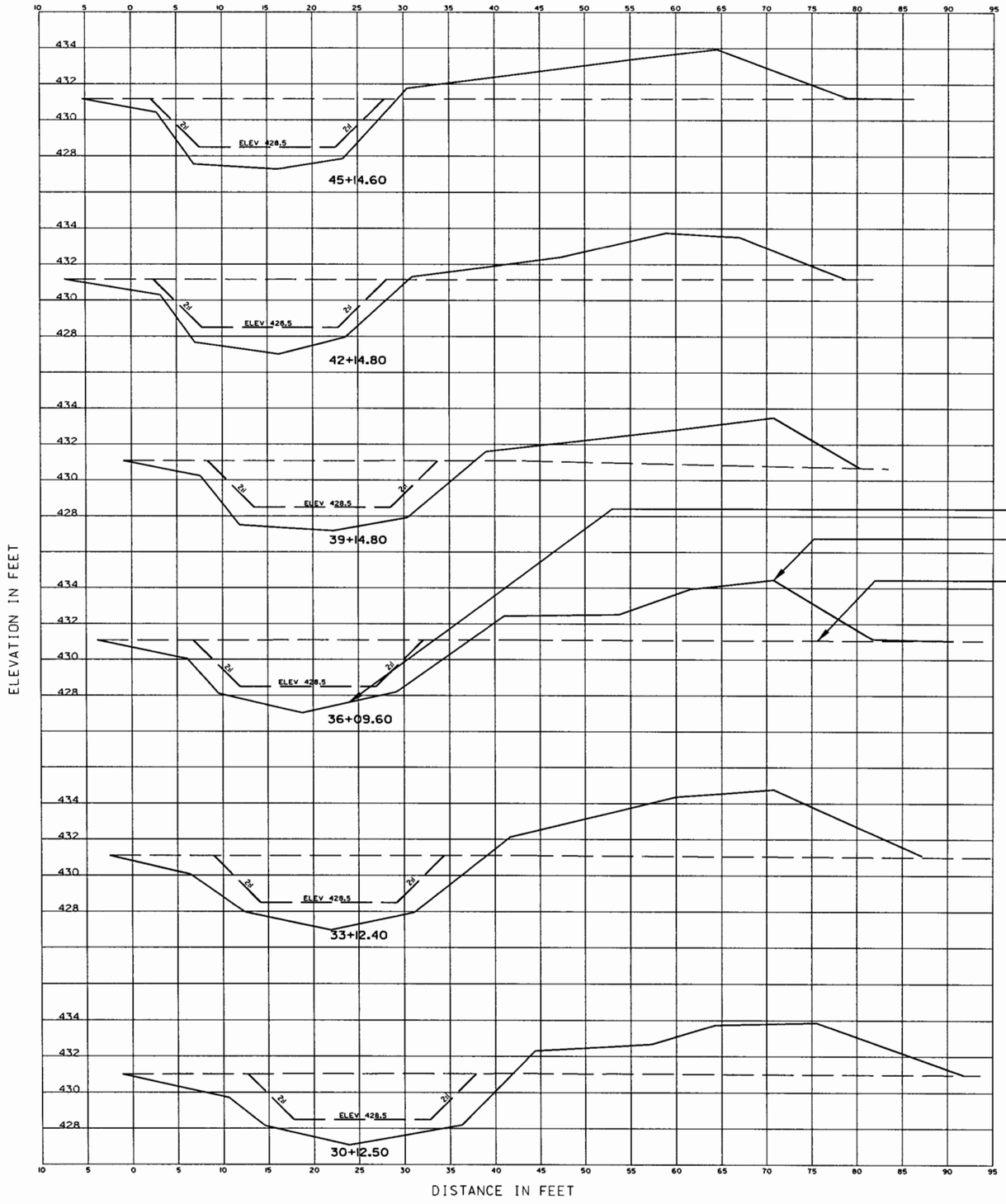

AS BUILT CROSS SECTIONS PROVIDED BY:
RJS CONSTRUCTORS
J. RAMPELBERG
11/24/03

US Army Corps of Engineers
Rock Island District

Symbol	Description	Date	Approved
1	AS BUILT	18 MAR 04	MRP

Revisions

Designed By: DRC
Drawn By: DWP
Checked By: KNM
Reviewed By: DRC
Date: MAR 2001
Scale: AS SHOWN
Project Code: 1-L1-3-1/67
Solicitation Number: DACW25-01-B-0012

U.S. ARMY ENGINEER DISTRICT
CORPS OF ENGINEERS
ROCK ISLAND, ILLINOIS

ILLINOIS WATERWAY PROGRAM
LA GRANGE POOL MILE 124 TO 129.5
LAKE CHAUTAUQUA
OPERATIONS AND MAINTENANCE

LOWER LAKE DEWATERING CHANNEL CROSS SECTIONS III

Sheet Reference Number:
F290
Sheet 74 of 84

02-MAR-2005 15:14
eenvrdfs#cadd#projects#EP52#OGM Manual - Use this one#ep52f290.dgn

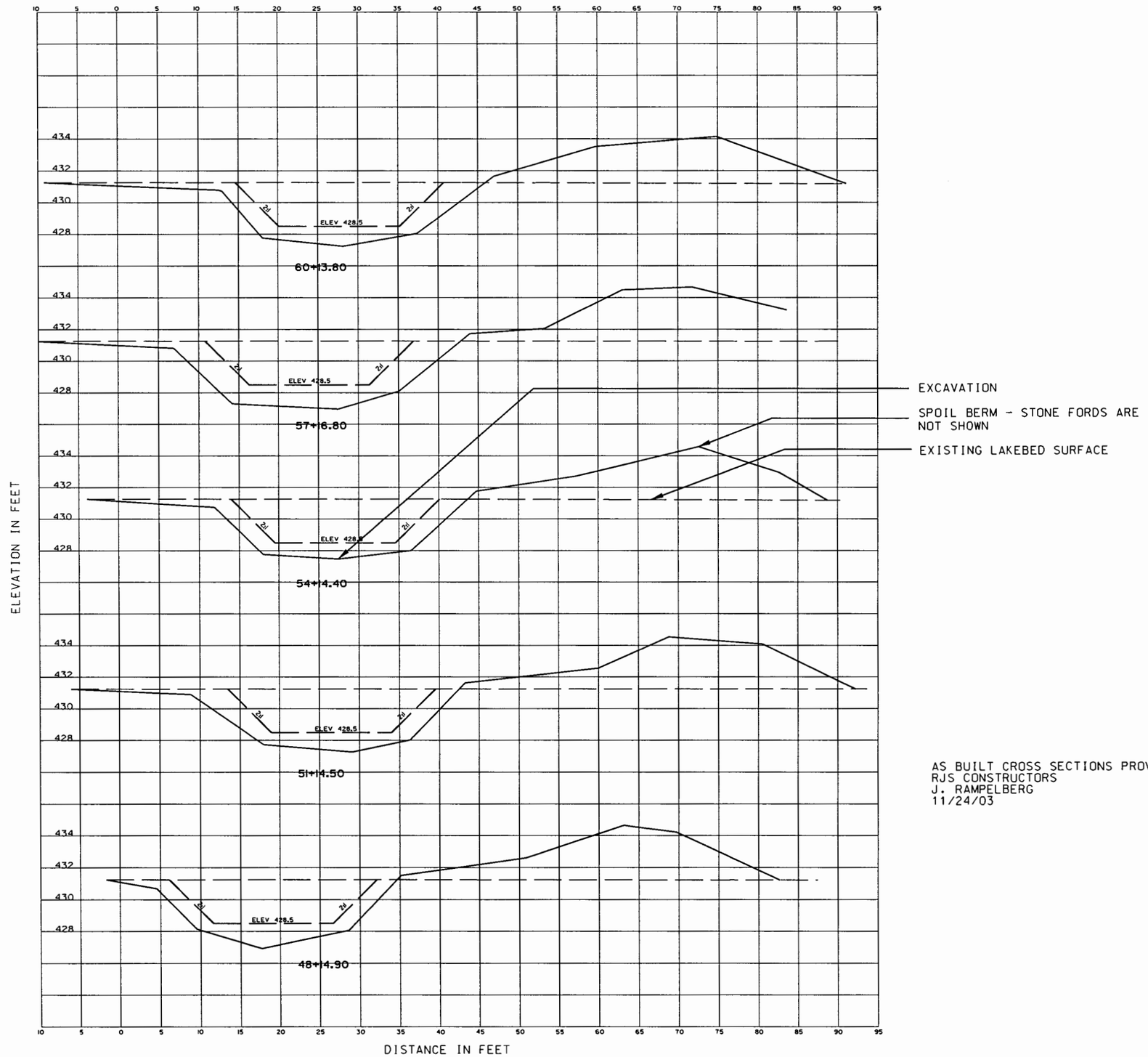

AS BUILT CROSS SECTIONS PROVIDED BY:
RJS CONSTRUCTORS
J. RAMPELBERG
11/24/03

US Army Corps of Engineers
Rock Island District

Symbol	Description	Date	Approved
A	AS BUILT	18 MAR 04	MRP

Revisions

Designed By: DRC
Drawn By: DWP
Checked By: KNM
Reviewed By: DRC
Date: MAR 2001
Scale: AS SHOWN
Project Code: 1-LI-3-1/67
Solicitation Number: DACW25-01-B-0012

U.S. ARMY ENGINEER DISTRICT
CORPS OF ENGINEERS
ROCK ISLAND, ILLINOIS

ILLINOIS WATERWAY
ENVIRONMENTAL MANAGEMENT PROGRAM
LA GRANGE POOL, MILE 124 TO 129.5
OPERATIONS AND MAINTENANCE

LOWER LAKE DEWATERING CHANNEL CROSS SECTIONS IV

Sheet Reference Number:
F300
Sheet 75 of 84

02-MAR-2005 15:15
wawrdfsscadd$projects$EP52$OGM Manual - Use this one$ep52f300.dgn

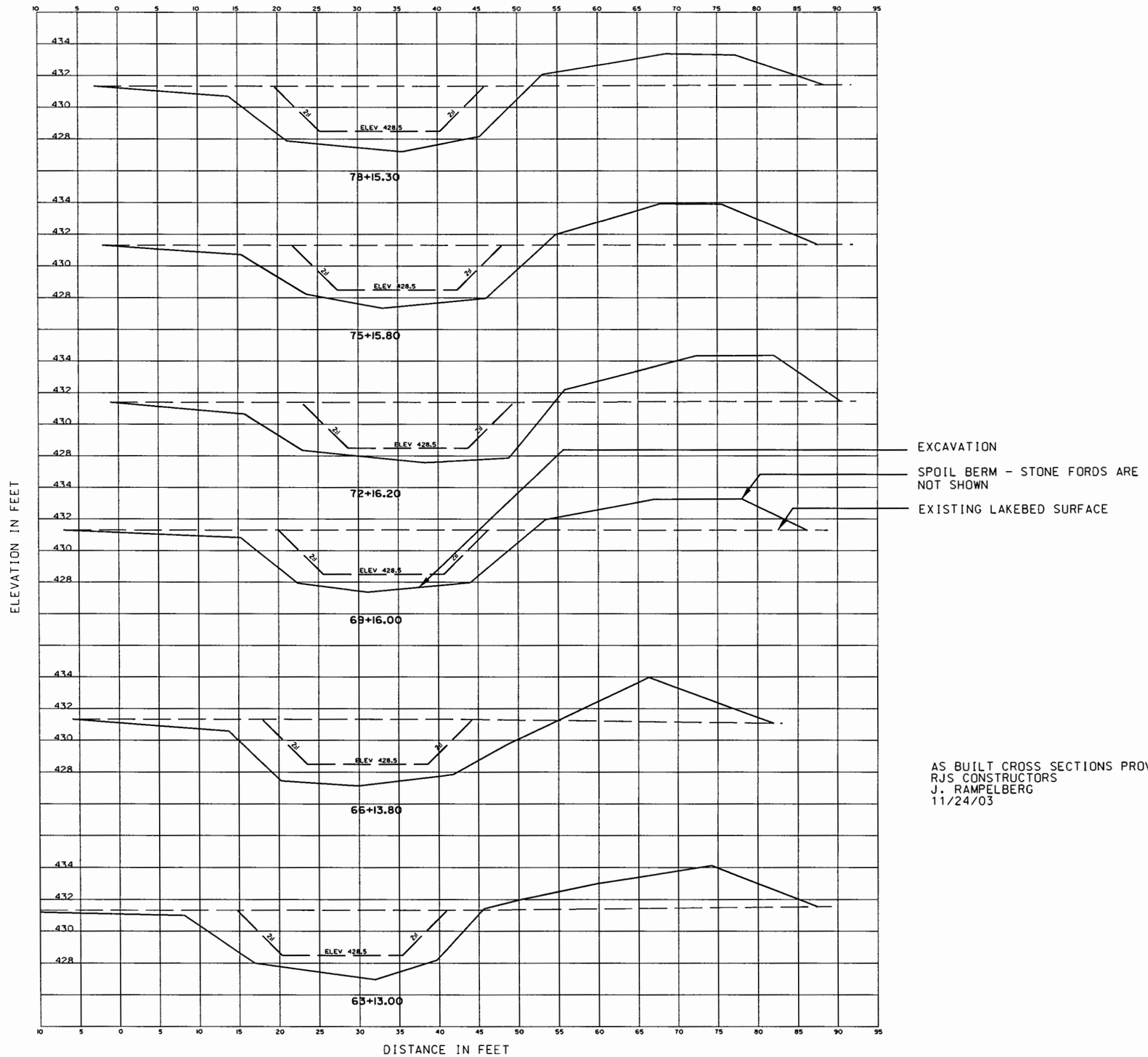

AS BUILT CROSS SECTIONS PROVIDED BY:
RJS CONSTRUCTORS
J. RAMPELBERG
11/24/03

US Army Corps of Engineers
Rock Island District

Symbol	Description	Date	Approved
A	AS BUILT	18 MAR 04	MRP

Revisions

Designed By: DRC
Drawn By: DWP
Checked By: KNM
Reviewed By: DRC
Date: MAR 2001
Scale: AS SHOWN
Project Code: 1-LI-3-1/67
Solicitation Number: DACW25-01-B-0012

U.S. ARMY ENGINEER DISTRICT
CORPS OF ENGINEERS
ROCK ISLAND, ILLINOIS

ILLINOIS WATERWAY
ENVIRONMENTAL MANAGEMENT PROGRAM
LA GRANGE POOL - MILE 124 TO 129.5
OPERATIONS AND MAINTENANCE

LOWER LAKE DEWATERING CHANNEL CROSS SECTIONS V

Sheet Reference Number:
F310
Sheet 76 of 84

02-MAR-2005 15:22
wwwurdfs\acad\proj\ects\EP52\OM Manual - Use this one\ep52f301.dgn

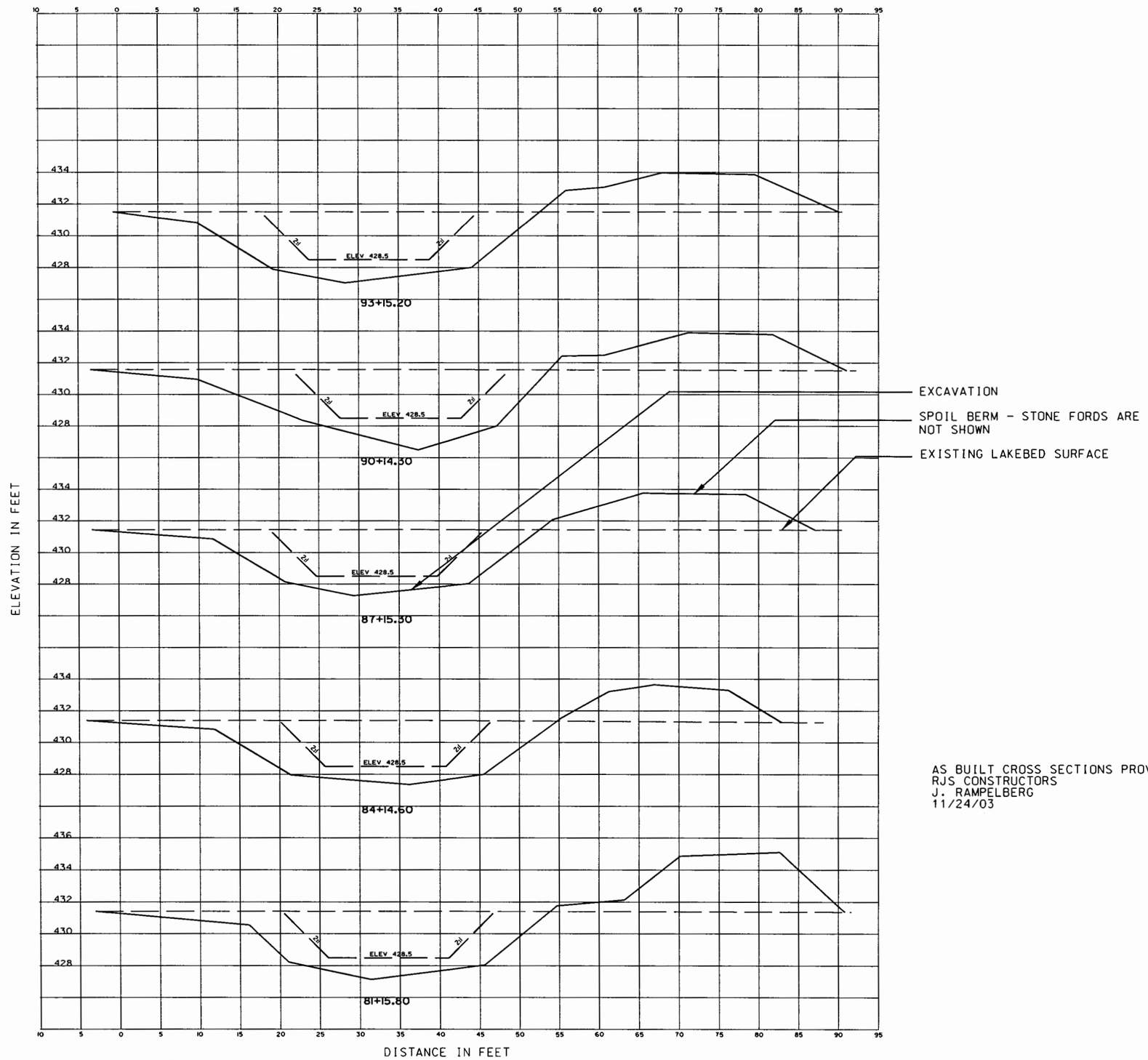

AS BUILT CROSS SECTIONS PROVIDED BY:
RJS CONSTRUCTORS
J. RAMPELBERG
11/24/03

US Army Corps of Engineers
Rock Island District

Symbol	Description	Date	Approved
1	AS BUILT	18 MAR 04	MRP

Revisions

Designed By: DRC
Drawn By: DWP
Checked By: KNM
Reviewed By: DRC
Date: MAR 2001
Scale: AS SHOWN
Project Code: 1-L1-3-1/67
Solicitation Number: DACW25-01-B-0012

U.S. ARMY ENGINEER DISTRICT
CORPS OF ENGINEERS
ROCK ISLAND, ILLINOIS

ILLINOIS WATERWAY
ENVIRONMENTAL MANAGEMENT PROGRAM
LA GRANGE POOL, MILE 124 TO 129.5
OPERATIONS AND MAINTENANCE

LOWER LAKE DEWATERING CHANNEL CROSS SECTIONS VI

Sheet Reference Number:
F320
Sheet 77 of 84

02-MAR-2005 15:22
wmv/dfscd06projctsEP52$OAM Manual - Use this one$ep52f302.dgn

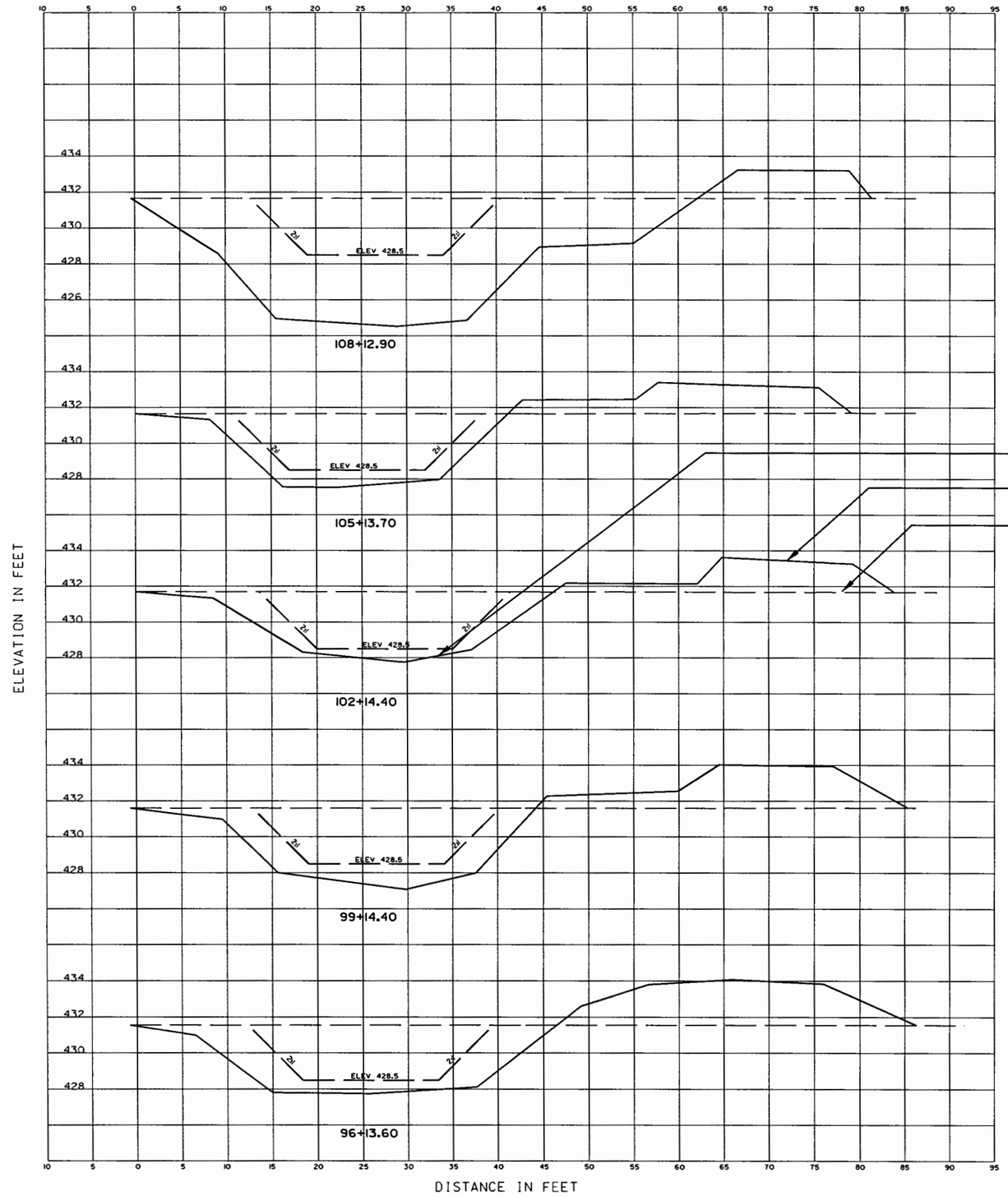

EXCAVATION

SPOIL BERM - STONE FORDS ARE NOT SHOWN

EXISTING LAKEBED SURFACE

AS BUILT CROSS SECTIONS PROVIDED BY:
RJS CONSTRUCTORS
J. RAMPELBERG
11/24/03

US Army Corps of Engineers
Rock Island District

Symbol	Description	Date	Approved
A	AS BUILT	18 MAR 04	MRP

Revisions

U.S. ARMY ENGINEER DISTRICT
CORPS OF ENGINEERS
ROCK ISLAND, ILLINOIS

Designed By: DRC
Drawn By: DWP
Checked By: KNM
Reviewed By: DRC
Date: MAR 2001
Scale: AS SHOWN
Project Code: 1-LI-3-1/67
Solicitation Number: DACW25-01-B-0012

ILLINOIS WATERWAY PROGRAM
ENVIRONMENTAL MANAGEMENT TO 129.5
LA GRANGE LOCK AND DAM
OPERATIONS AND MAINTENANCE

LOWER LAKE DEWATERING CHANNEL CROSS SECTIONS VII

Sheet Reference Number:
F330
Sheet 78 of 84

02-MAR-2005 15:22
eamvrdfsecaddsprojects\EP52\ROM Manual - Use this one\ep52f303.dgn

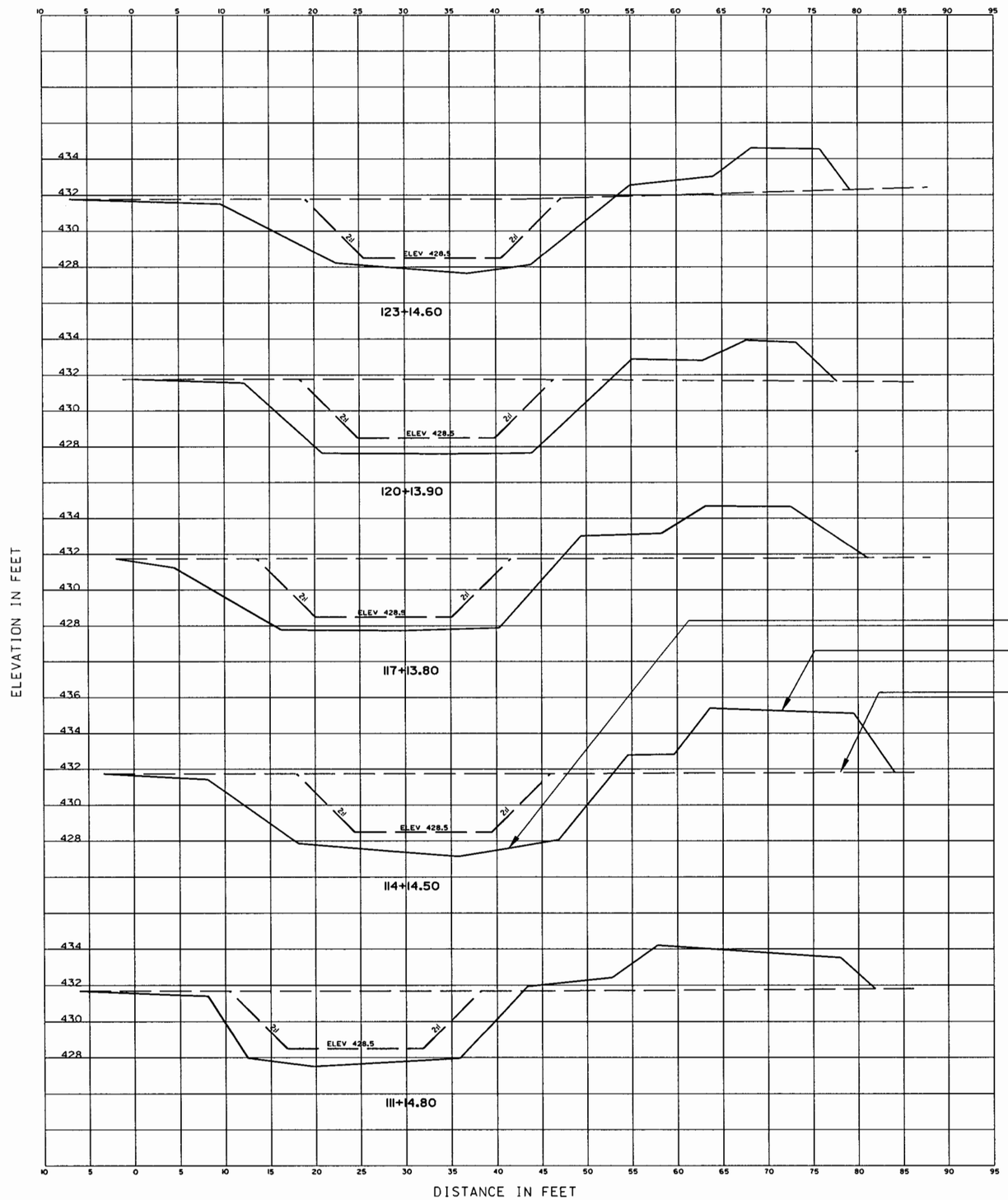

AS BUILT CROSS SECTIONS PROVIDED BY:
RJS CONSTRUCTORS
J. RAMPELBERG
11/24/03

US Army Corps of Engineers
Rock Island District

Symbol	Description	Date	Approved
1	AS BUILT	18 MAR 04	MRP

Revisions

Designed By: DRC
Drawn By: DWP
Checked By: KNM
Reviewed By: DRC
Date: MAR 2001
Scale: AS SHOWN
Project Code: 1-L1-3-1/67
Solicitation Number: DACW25-01-B-0012

U.S. ARMY ENGINEER DISTRICT
CORPS OF ENGINEERS
ROCK ISLAND, ILLINOIS

ILLINOIS WATERWAY
ENVIRONMENTAL MANAGEMENT PROGRAM
LA GRANGE POOL, MILE 124 TO 129.5
OPERATIONS AND MAINTENANCE

LOWER LAKE DEWATERING CHANNEL CROSS SECTIONS VIII

Sheet Reference Number:
F340
Sheet 79 of 84

02-MAR-2005 15:23
admin/dfs4ocd0wpc/projects#EP52#QDM Mzrugl - Use this onemap52f304.dgn

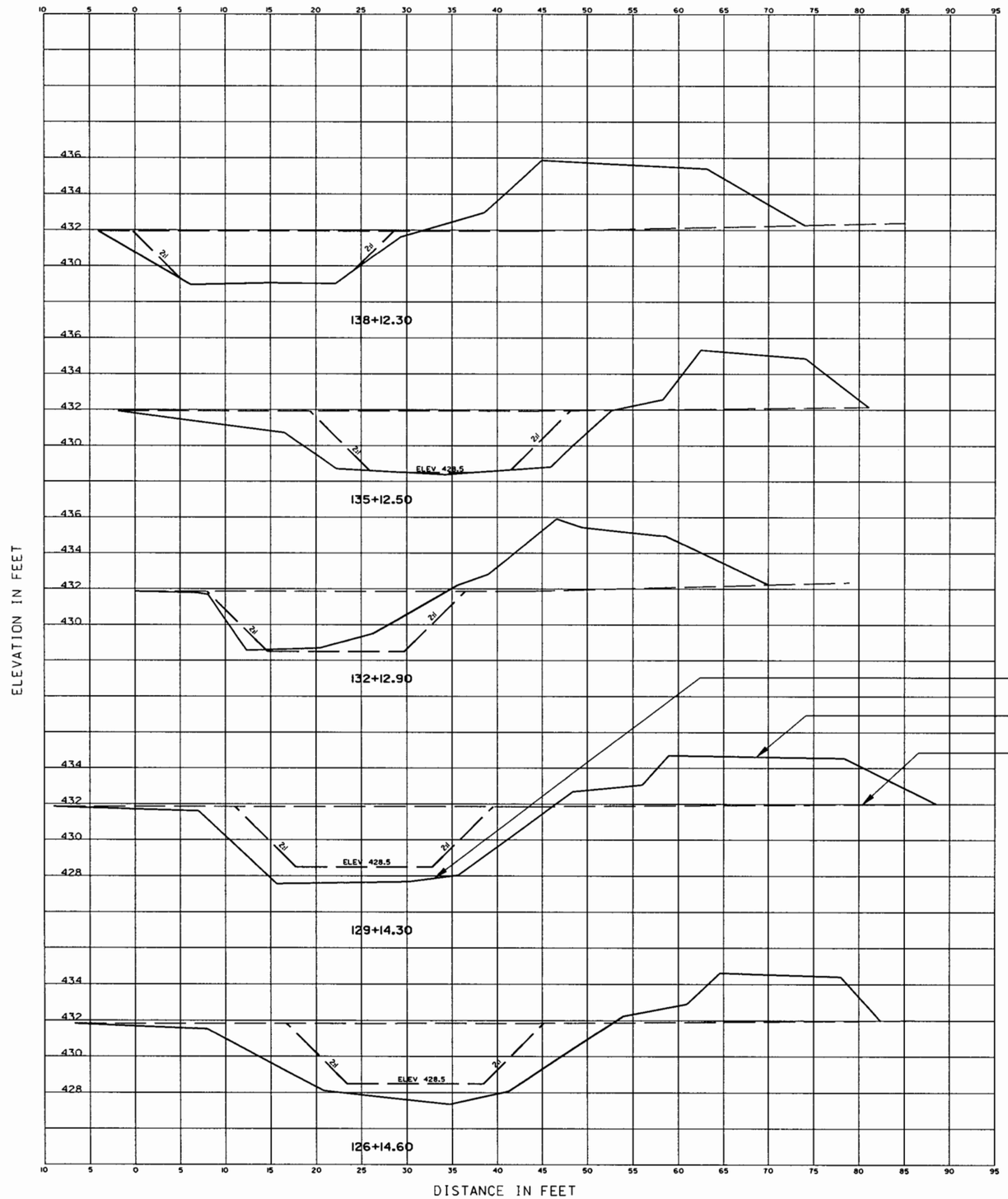

AS BUILT CROSS SECTIONS PROVIDED BY:
RJS CONSTRUCTORS
J. RAMPELBERG
11/24/03

US Army Corps of Engineers
Rock Island District

Symbol	Description	Date	Approved
1	AS BUILT	11 MAR 04	MP

Revisions

Designed By: DRC
Drawn By: DWP
Checked By: KNM
Revised By: DRC
Date: MAR 2001
Scale: AS SHOWN
Project Code: 1-LI-3-1/67
Solicitation Number: DACW25-01-B-0012

U.S. ARMY ENGINEER DISTRICT
CORPS OF ENGINEERS
ROCK ISLAND, ILLINOIS

ILLINOIS WATERWAY
ENVIRONMENTAL MANAGEMENT PROGRAM
LA GRANGE POOL MILE 224 TO 229.5
OPERATIONS AND MAINTENANCE

LOWER LAKE
DEWATERING CHANNEL
CROSS SECTIONS IX

Sheet Reference Number:
F350
Sheet 80 of 84

02-MAR-2005 15:21
emmr/dfs&cad&mp/projects&EPS240&M Manual - Use this onemep52f305.dgn

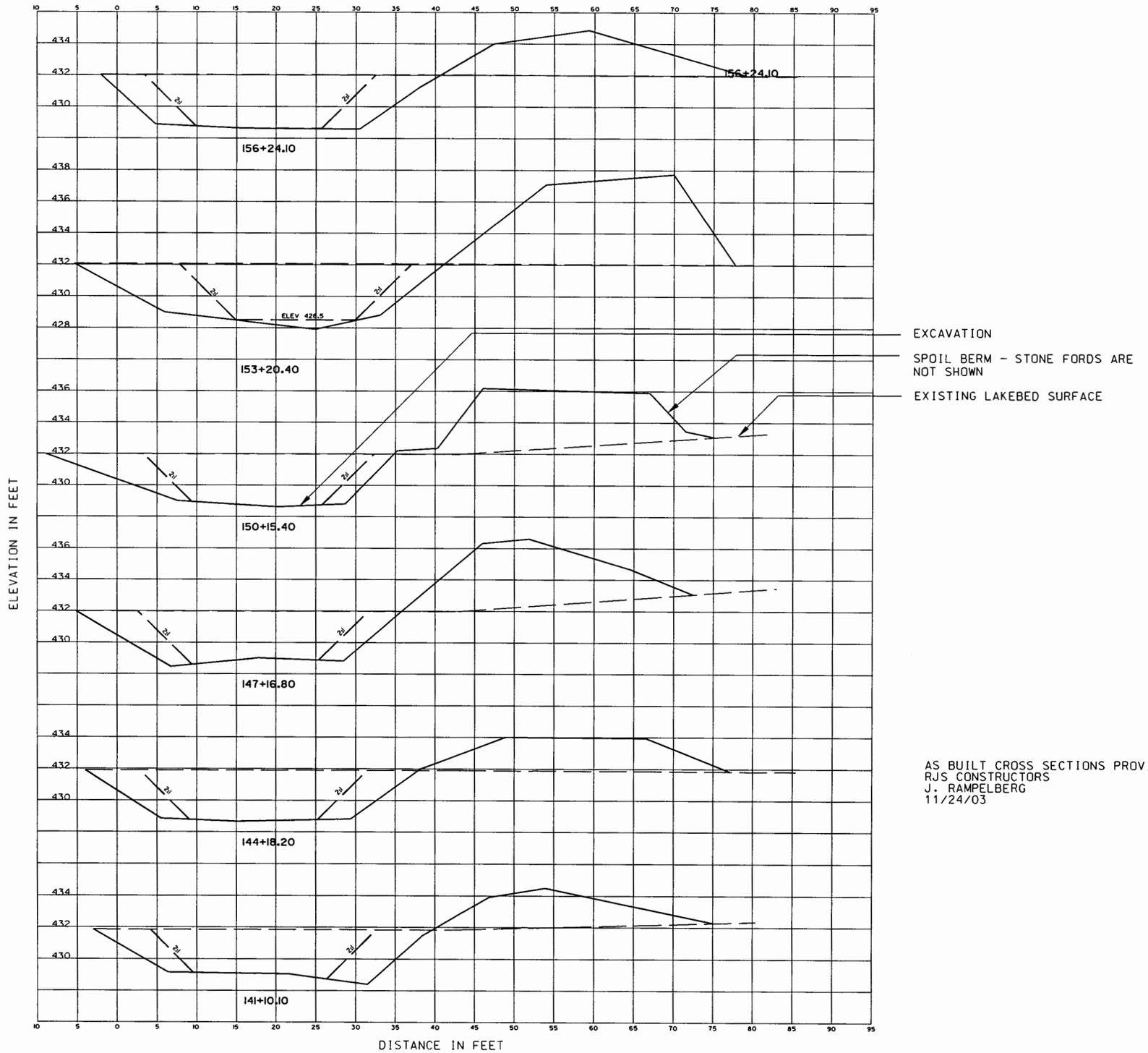

AS BUILT CROSS SECTIONS PROVIDED BY:
RJS CONSTRUCTORS
J. RAMPELBERG
11/24/03

US Army Corps of Engineers
Rock Island District

Symbol	Description	Date	Approved
1	AS BUILT	18 MAR 04	MRP

Revisions

Designed By: DRC
Drawn By: DWP
Checked By: KNM
Reviewed By: DRC
Date: MAR 2001
Scale: AS SHOWN
Project Code: 1-LI-3-1/67
Solicitation Number: W25-01-B-0012

U.S. ARMY ENGINEER DISTRICT
CORPS OF ENGINEERS
ROCK ISLAND, ILLINOIS

ILLINOIS WATERWAY
ENVIRONMENTAL MANAGEMENT PROGRAM
LA GRANGE POOL, MILES 72 TO 129.5
OPERATIONS AND MAINTENANCE
LAKE CHAUTAUQUA

LOWER LAKE DEWATERING CHANNEL CROSS SECTIONS X

Sheet Reference Number:
F360
Sheet 81of 84

02-MAR-2005 15:24
$$$$mvrdfs$$cadd$$projects$$EP52$$DM Manual - Use this one$$ep52f306.dgn

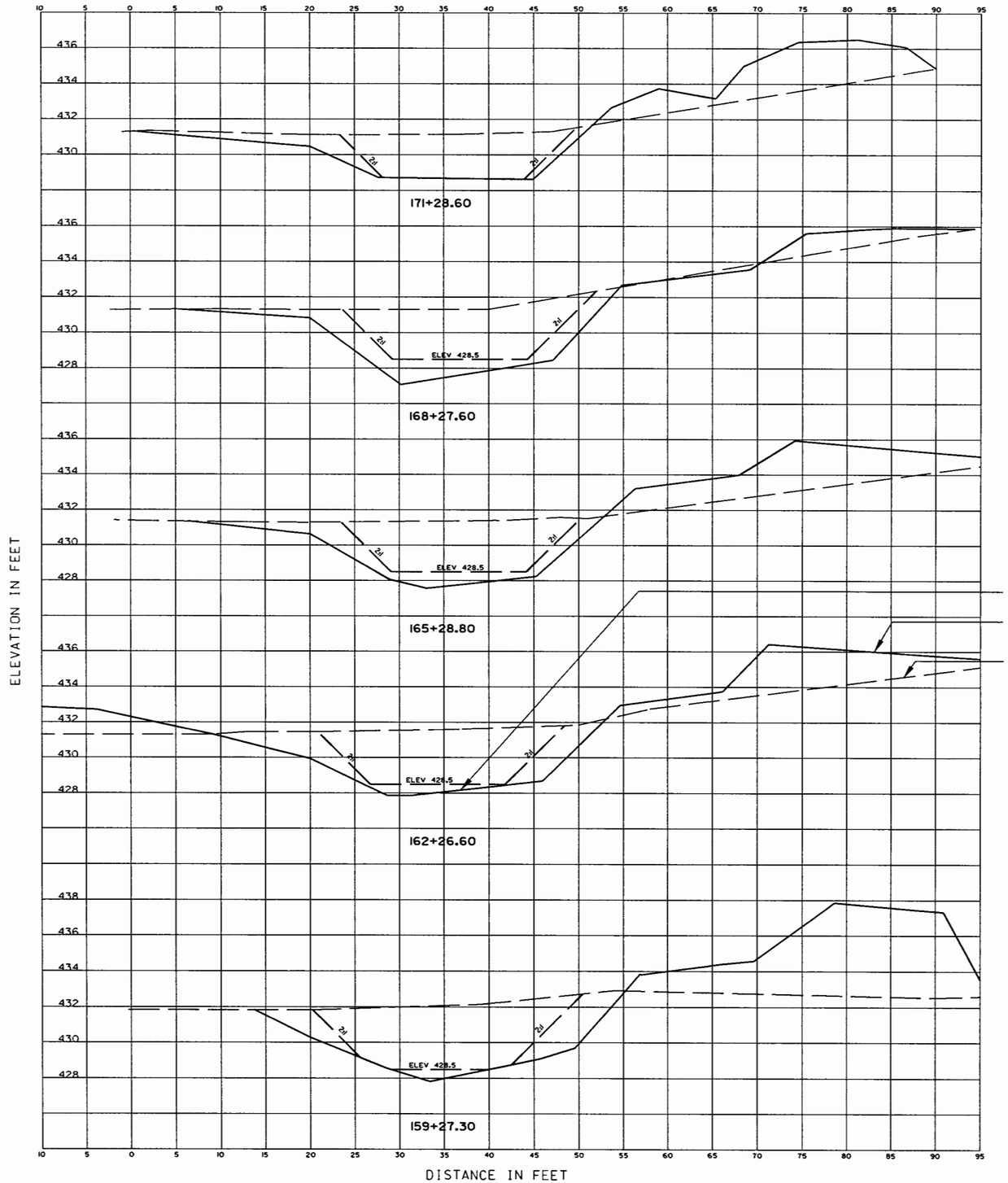

AS BUILT CROSS SECTIONS PROVIDED BY:
RJS CONSTRUCTORS
J. RAMPELBERG
11/24/03

US Army Corps of Engineers
Rock Island District

Symbol	Description	Date	Approved
△	AS BUILT	18 MAR 04	MRP

Revisions

Designed By: DRC
Date: MAR 2001
Drawn By: DWP
Scale: AS SHOWN
Checked By: KNM
Project Code: 1-L1-3-1/67
Reviewed By: DRC
Solicitation Number: DACW25-01-B-0012

U.S. ARMY ENGINEER DISTRICT
CORPS OF ENGINEERS
ROCK ISLAND, ILLINOIS

ILLINOIS WATERWAY
ENVIRONMENTAL MANAGEMENT PROGRAM
LA GRANGE POOL, MILE 80.4 TO 129.5
OPERATIONS AND MAINTENANCE
LAKE CHAUTAUQUA

LOWER LAKE DEWATERING CHANNEL CROSS SECTIONS XI

Sheet Reference Number:
F370
Sheet 82of 84

02-MAR-2005 15:24
s:\mvrdfs\acad\projects\EP52\EOM Manual - Use this one\ep521307.dgn

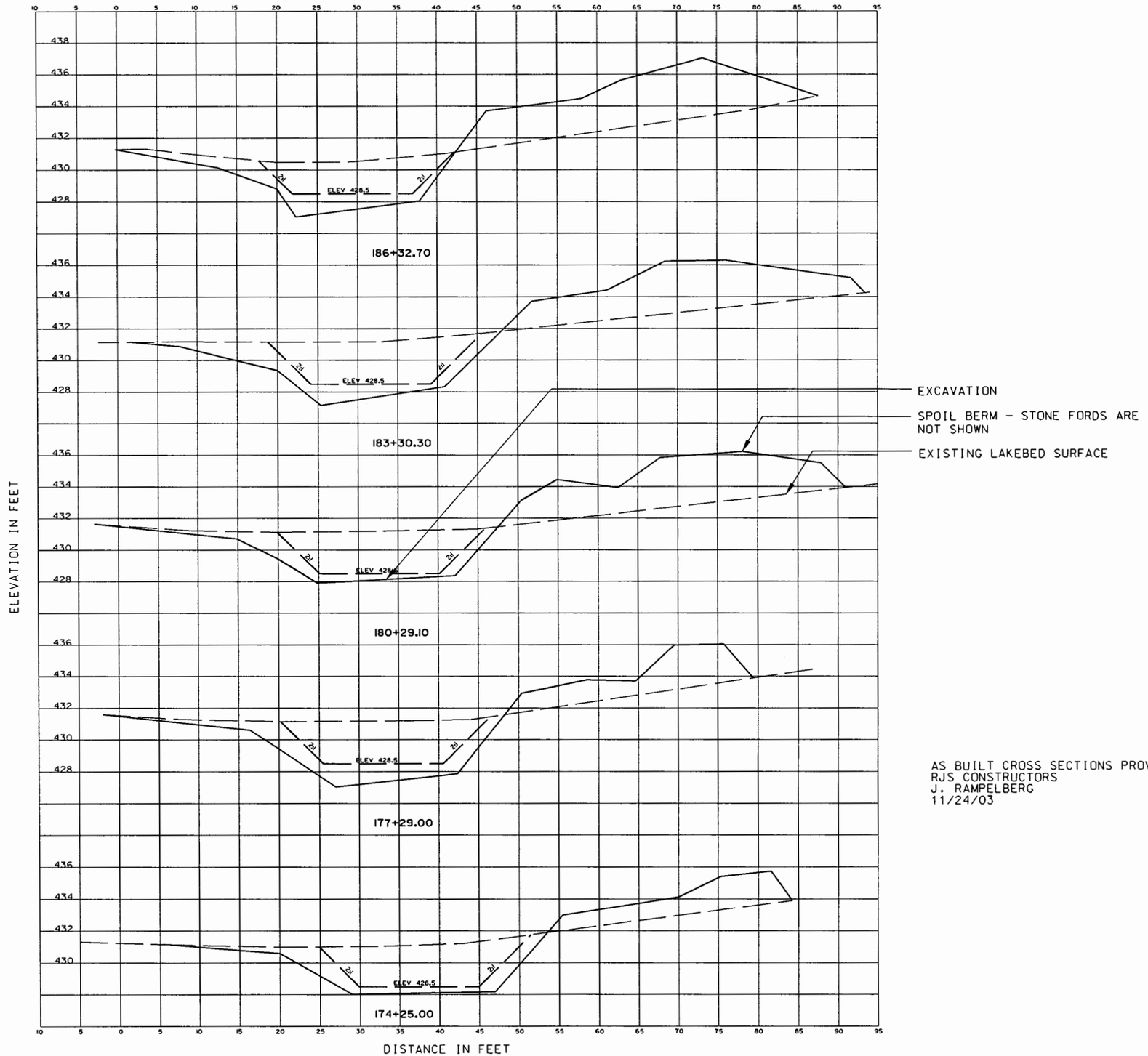

AS BUILT CROSS SECTIONS PROVIDED BY:
RJS CONSTRUCTORS
J. RAMPELBERG
11/24/03

US Army Corps of Engineers
Rock Island District

Symbol	Description	Date	Approved
1	AS BUILT	18 MAR 04	MRP

Revisions

Designed By: DRC
Drawn By: DWP
Checked By: KNM
Reviewed By: DRC
Date: MAR 2001
Scale: AS SHOWN
Project Code: I-LI-3-1/67
Solicitation Number: DACW25-01-B-0012

U.S. ARMY ENGINEER DISTRICT
CORPS OF ENGINEERS
ROCK ISLAND, ILLINOIS

ILLINOIS WATERWAY
ENVIRONMENTAL MANAGEMENT PROGRAM
LA GRANGE POOL, MILE 80.4 TO 129.5
OPERATIONS AND MAINTENANCE

LOWER LAKE DEWATERING CHANNEL CROSS SECTIONS XII

Sheet Reference Number:
F380
Sheet 83 of 84

02-MAR-2005 15:24
wwwrdfs\ecodsdgn\projects\EPS2\MDM Manual - Use this one\eep52f308.dgn

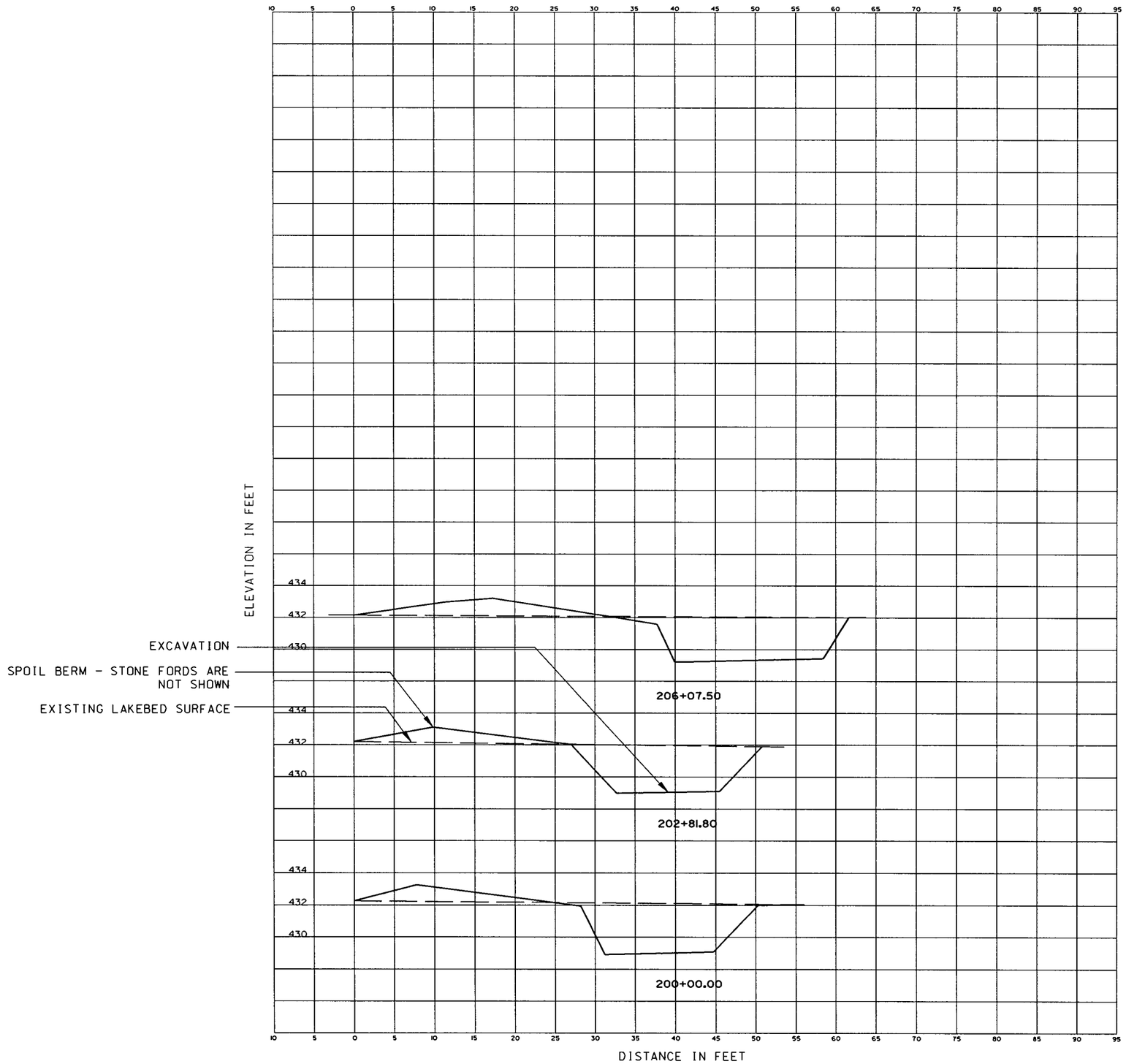

AS BUILT CROSS SECTIONS PROVIDED BY:
RJS CONSTRUCTORS
J. RAMPELBERG
11/24/03

US Army Corps of Engineers
Rock Island District

Symbol	Description	Date	Approved
△	AS BUILT	11 MAR 04	MRP

Revisions

Designed By: DRC
Drawn By: DWP
Checked By: KNM
Reviewed By: DRC
Date: MAR 2001
Scale: AS SHOWN
Project Code: 1-L1-3-1/67
Solicitation Number: DACW25-01-B-0012

U.S. ARMY ENGINEER DISTRICT
CORPS OF ENGINEERS
ROCK ISLAND, ILLINOIS

ILLINOIS WATERWAY
ENVIRONMENTAL MANAGEMENT PROGRAM
LA GRANGE LOCK AND DAM 1A TO 1291.5
OPERATIONS AND MAINTENANCE

LOWER LAKE
DEWATERING CHANNEL
CROSS SECTIONS XIII

Sheet Reference Number:
F390
Sheet 84 of 84

02-MAR-2005 15:25
smmurdfs&cad(dgn/projects&EPS2&OM Manual - Use this one&ep52f309.dgn