GENERAL SHEET NOTES

1. MATERIAL EXCAVATED FROM CHANNELS ARE NOT TO BE USED FOR TURNAROUND OR LEVEE IMPROVEMENT CONSTRUCTION.

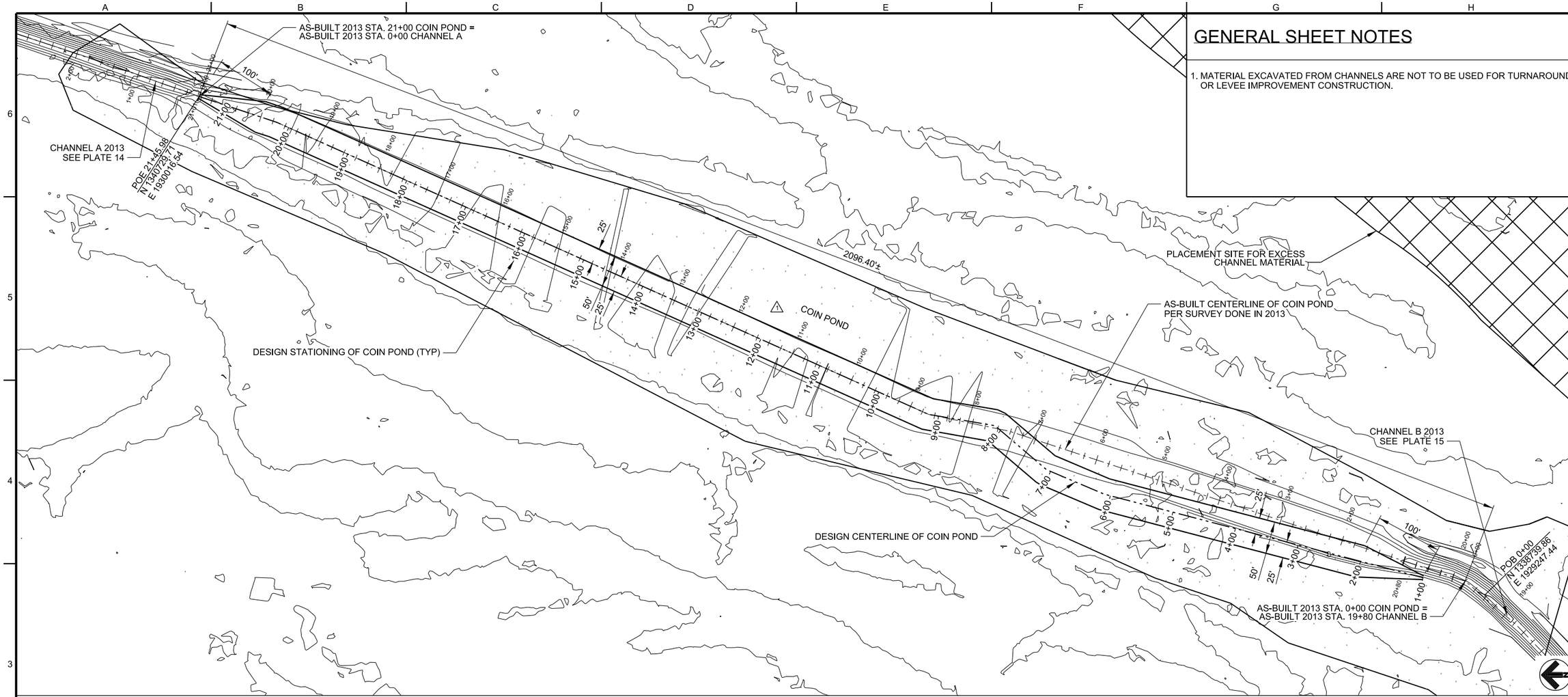

A3 COIN POND PLAN

SCALE : 1"=80'-0" 0 80' 160'

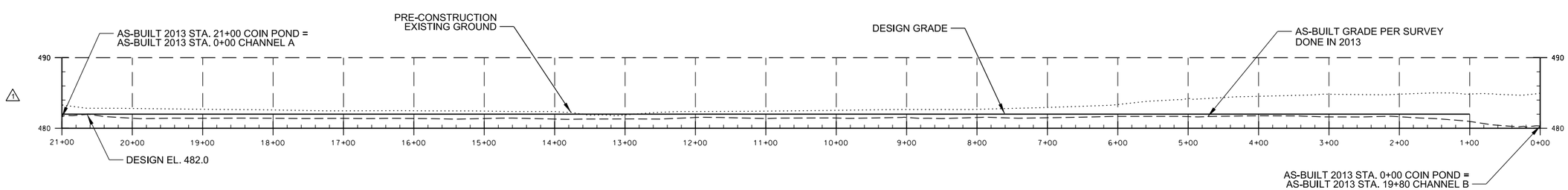

A1 COIN POND PROFILE

SCALE : 1"=80'-0" 0 80' 160'

US Army Corps of Engineers ®
Rock Island District

Symbol	Description	Date	Approved
1	AS-BUILT AS OF MARCH 31 2015 MOD-EA008 - POND-EXCAVATION	02-MAR-12	ELS/HLA

Revisions

Designed By: PJV	Date: 2010/07/14		
Drawn By: JMF	Scale: AS SHOWN		
Checked By: RCF	Project Code: EP98		
Reviewed By: HLA	Solicitation Number: W912EK-10-B-0025		

U.S. ARMY ENGINEER DISTRICT
CORPS OF ENGINEERS
ROCK ISLAND, ILLINOIS

MISSISSIPPI RIVER
POOL 20 RM 358.5 TO 353.6
ALEXANDRIA, MO
FOX ISLAND HREP O & M MANUAL

COIN POND CHANNEL PLAN AND PROFILE

Sheet Reference Number:
PLATE 20

B5ECD JMF
1/11/2012
PLATE 20.dgn

GENERAL SHEET NOTES

1. MATERIAL EXCAVATED FROM CHANNELS ARE NOT TO BE USED FOR TURNAROUND OR LEVEE IMPROVEMENT CONSTRUCTION.

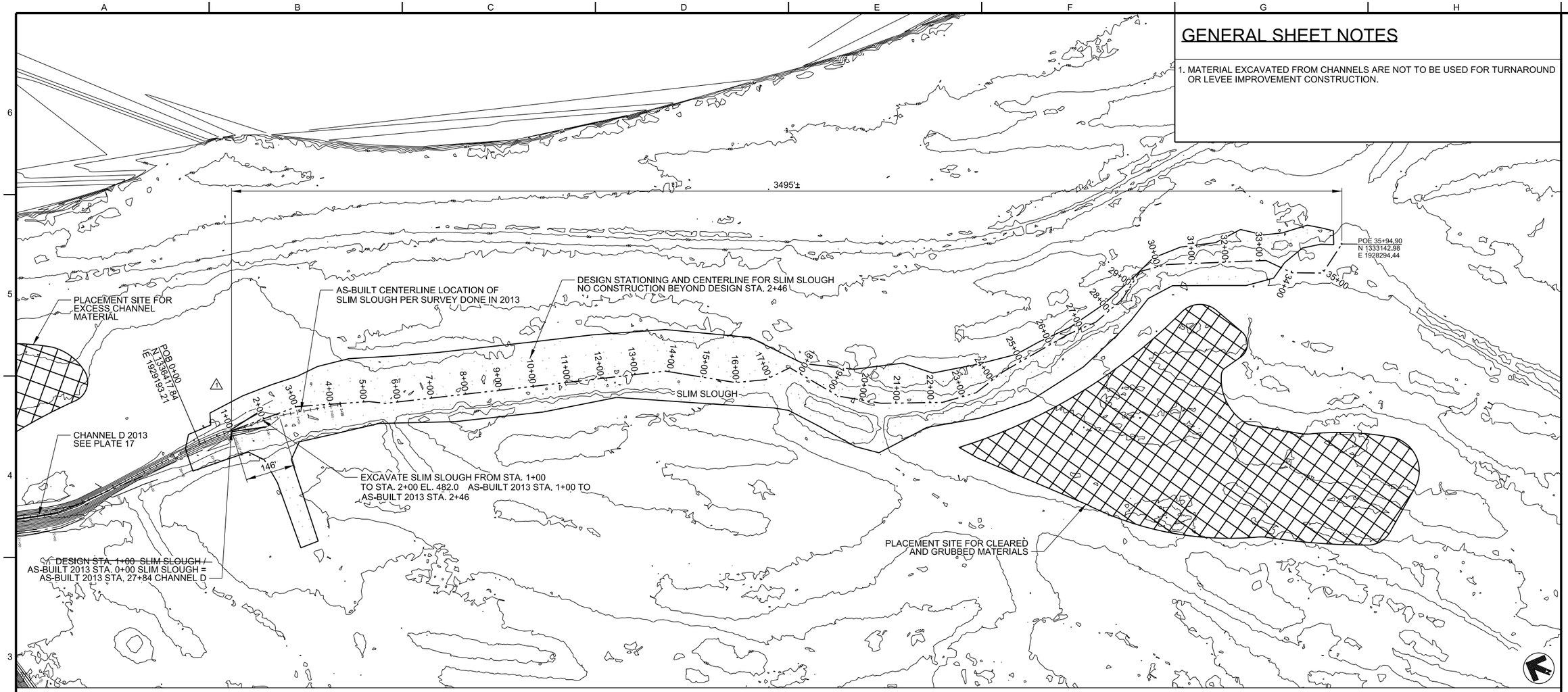

A3 SLIM SLOUGH PLAN

SCALE : 1"=150'-0" 0 150' 300'

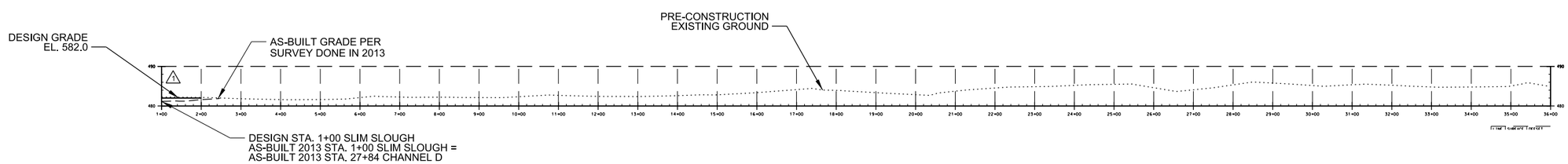

A1 SLIM SLOUGH CHANNEL PROFILE

SCALE : 1"=150'-0" 0 150' 300'

US Army Corps of Engineers ®
Rock Island District

Symbol	Description	Date	Approved
1	AS-BUILT AS OF MARCH 31 2015 MOD-EA008 - POND EXCAVATION	02 MAR 12	ELS/HLA

Revisions

Designed By: PJV
Date: 2010/07/14
Drawn By: JMF
Scale: AS SHOWN
Checked By: RCF
Project Code: EP98
Reviewed By: HLA
Solicitation Number: W912EK-10-B-0025

U.S. ARMY ENGINEER DISTRICT
CORPS OF ENGINEERS
ROCK ISLAND, ILLINOIS

MISSISSIPPI RIVER
POOL 20 RM 358.5 TO 353.6
ALEXANDRIA, MO
FOX ISLAND HREP O & M MANUAL

SLIM SLOUGH CHANNEL PLAN AND PROFILE

Sheet Reference Number:
PLATE 21

B5ECDJMF
7/12/2016
PLATE 21.dgn

GENERAL SHEET NOTE

1. MATERIAL EXCAVATED FROM CHANNELS ARE NOT TO BE USED FOR TURNAROUND OR LEVEE IMPROVEMENT CONSTRUCTION.

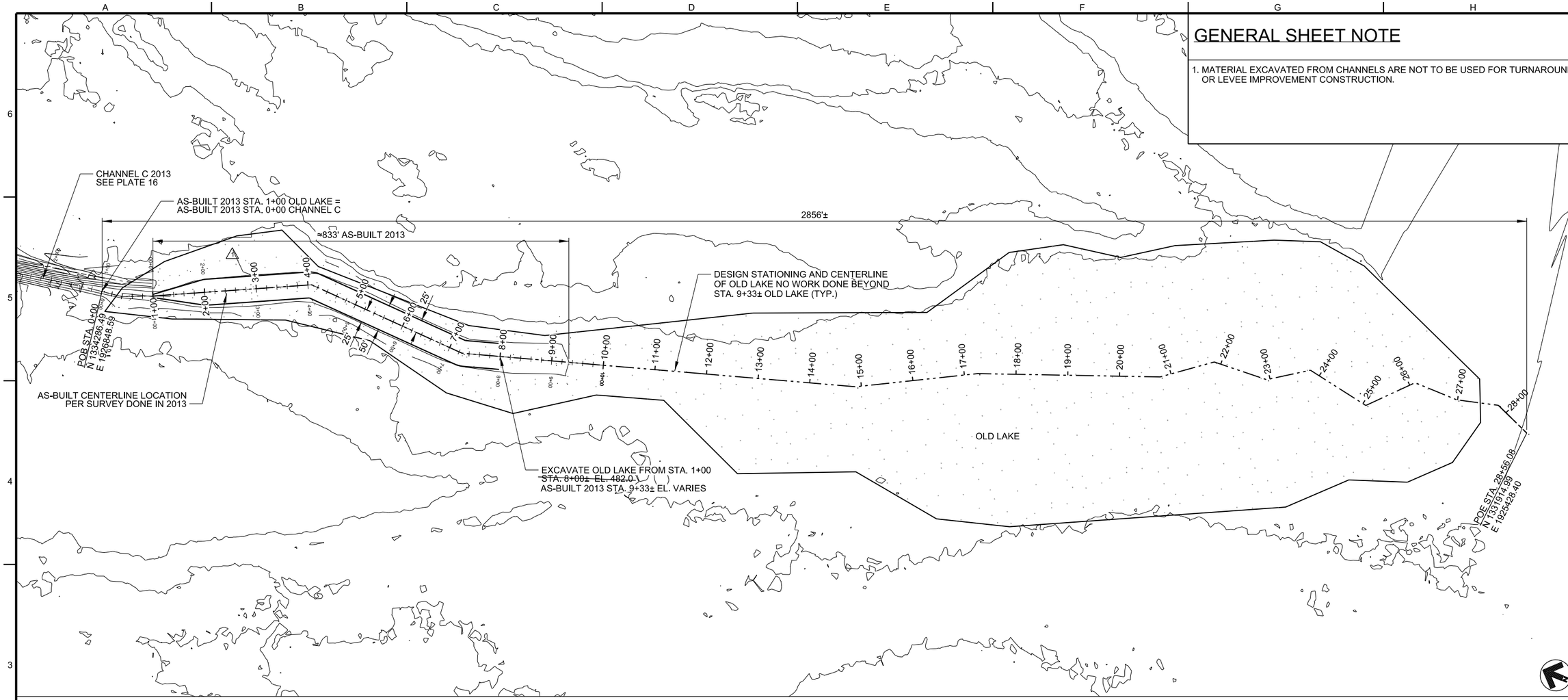

A3 OLD LAKE CHANNEL PLAN

SCALE : 1"=100'-0" 0 100' 200'

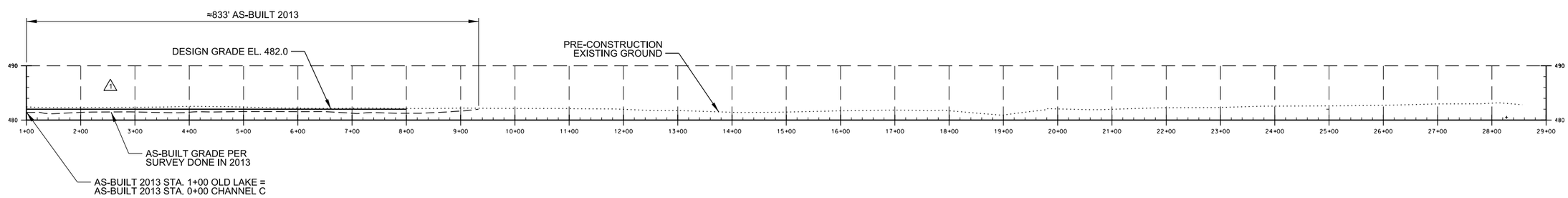

A1 OLD LAKE CHANNEL PROFILE

SCALE : 1"=100'-0" 0 100' 200'

US Army Corps of Engineers ®
Rock Island District

Symbol	Description	Date	Approved
1	AS-BUILT AS OF MARCH 31 2015 MOD-EA008 - POND-EXCAVATION	02-MAR-12	ELS/HLA

Revisions

Designed By: PJV
Drawn By: JMF
Checked By: RCF
Reviewed By: HLA
Date: 2010/07/14
Scale: AS SHOWN
Project Code: EP98
Solicitation Number: W912EK-10-B-0025

U.S. ARMY ENGINEER DISTRICT
CORPS OF ENGINEERS
ROCK ISLAND, ILLINOIS

MISSISSIPPI RIVER
POOL 20 RM 358.5 TO 353.6
ALEXANDRIA, MO
FOX ISLAND HREP O & M MANUAL

OLD LAKE CHANNEL PLAN AND PROFILE

Sheet Reference Number:
PLATE 22

B35ECDJMF
4/17/2015
PLATE 22.dgn

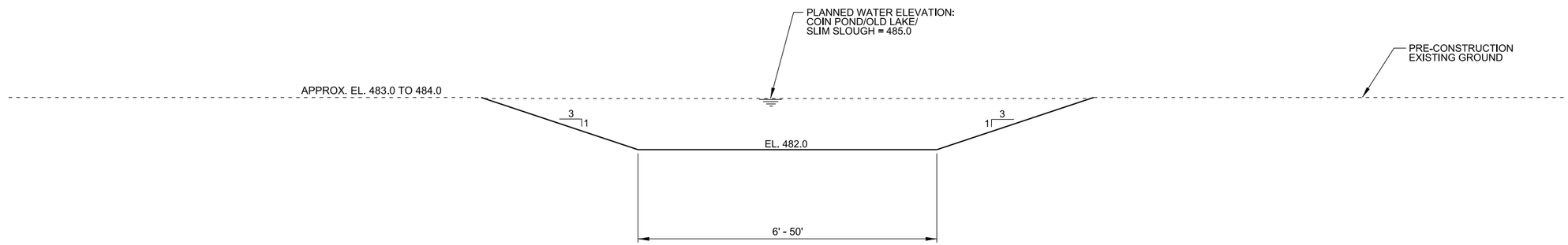

A1 POND CHANNEL TYPICAL SECTION (COIN POND, OLD LAKE, AND SLIM SLOUGH)

SCALE : 1"=4'-0"

0 4' 8'

B35ECDJMF
11/12/2015
PLATE 23.dgn

US Army Corps of Engineers ®
Rock Island District

Symbol	Description	Date	Approved
1	AS-BUILT AS OF MARCH 31 2015 MOD-EA008 - NEW SHEET	02-MAR-12	ELS/HLA

Revisions

U.S. ARMY ENGINEER DISTRICT
CORPS OF ENGINEERS
ROCK ISLAND, ILLINOIS

Designed By:	PJV	Date:	2010/07/14
Drawn By:	JMF	Scale:	AS SHOWN
Checked By:	RCF	Project Code:	EP98
Reviewed By:	HLA	Solicitation Number:	W912EK-10-B-0025

MISSISSIPPI RIVER
POOL 20 RM 358.5 TO 353.6
ALEXANDRIA, MO
FOX ISLAND HREP O & M MANUAL

POND CHANNEL TYPICAL SECTION

Sheet Reference Number:
PLATE 23

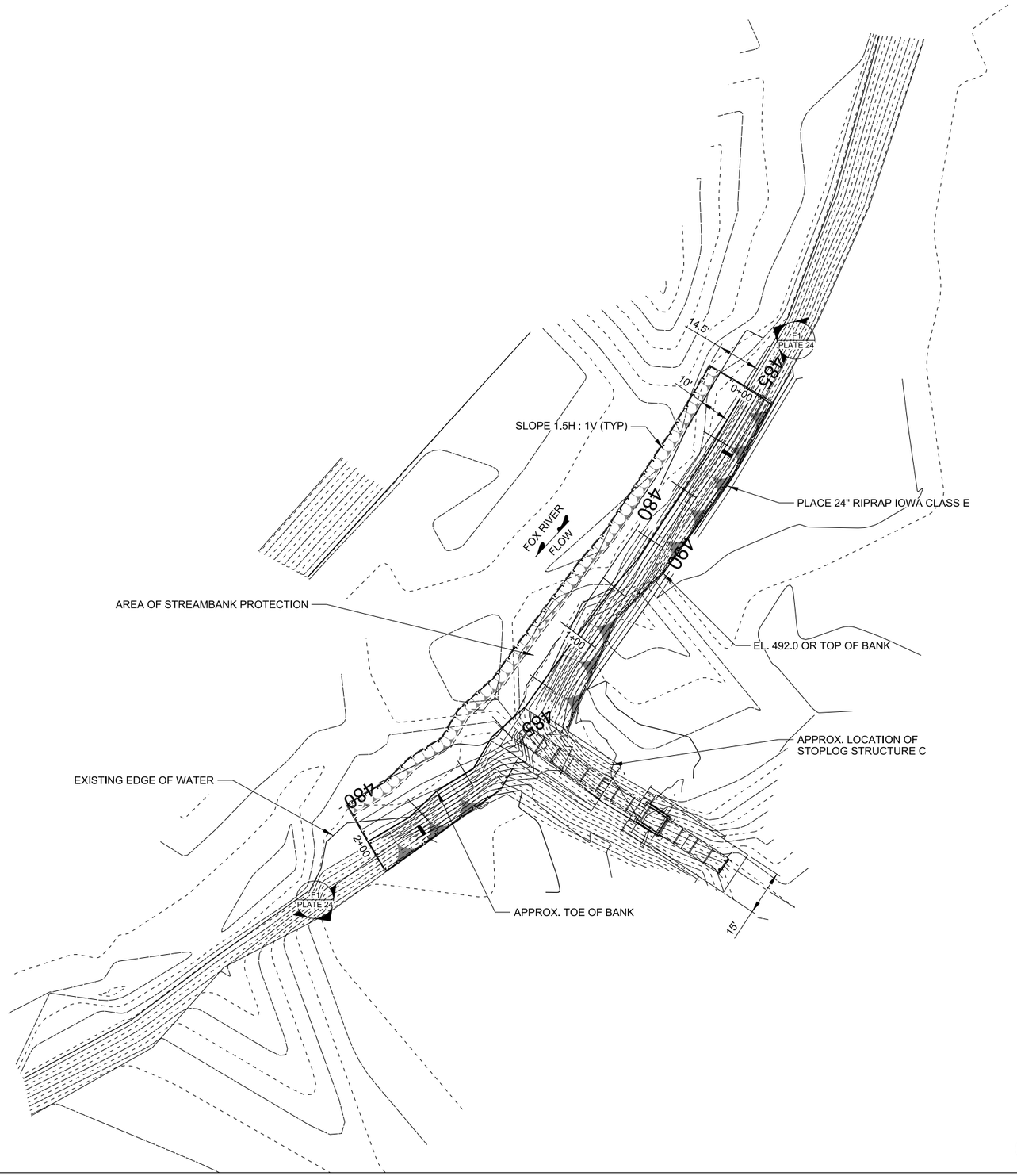

A1 FOX RIVER STREAMBANK PROTECTION PLAN

SCALE : 1"=20'-0"

0 10' 20' 40'

GENERAL SHEET NOTES

1. THE STREAMBANK PROTECTION RIPRAP (IA CLASS D) SHALL TIE-IN TO THE STOPLOG C RIPRAP (IA CLASS E) WITHIN 7.5' OF THE CULVERT CENTERLINE.
2. TYPICAL KEY-IN SECTION IS AT EITHER END OF RIPRAP PLACEMENT TRANSVERSING ALONG SLOPE. SEE PLATE 24 PLAN FOR ORIENTATION OF CUT.

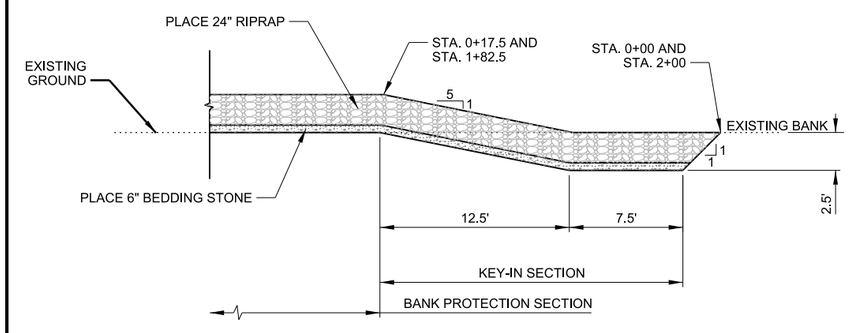

F1 TYPICAL KEY-IN SECTION

SCALE : 1"=5'-0"

0 5' 10'

US Army Corps of Engineers ®
Rock Island District

Symbol	Description	Date	Approved
1	AS-BUILT AS OF MARCH 31 2015 MOD-EA014 - NEW SHEET	25 JUL 12	ELS

Revisions

Designed By: PJV
Drawn By: JMF
Checked By: RCF
Reviewed By: HLA
Date: 2010/07/14
Scale: AS SHOWN
Project Code: EP98
Solicitation Number: W912EK-10-B-0025

U.S. ARMY ENGINEER DISTRICT
CORPS OF ENGINEERS
ROCK ISLAND, ILLINOIS

MISSISSIPPI RIVER
POOL 20 RM 358.5 TO 353.6
ALEXANDRIA, MO
FOX ISLAND HREP O & M MANUAL

FOX RIVER STREAMBANK PLAN AND SECTION

Sheet Reference Number:
PLATE 24

B5ECD JMF
1/11/2013
PLATE 24.dgn

GENERAL SHEET NOTES

1. CUT MATERIAL TO BE HAULED TO BORROW AREA, GRADED, AND SEEDED.
2. ALL AS-BUILT ELEVATIONS ARE FROM SURVEY DONE IN 2013 / 2014.

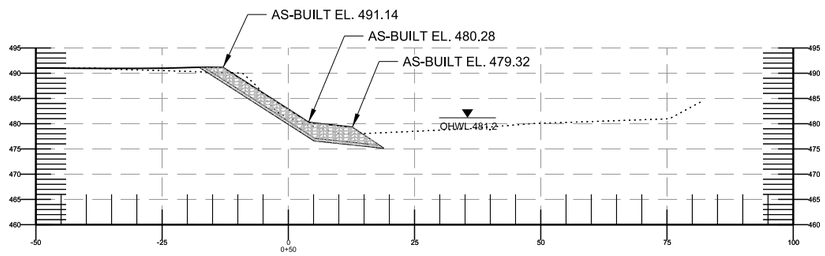

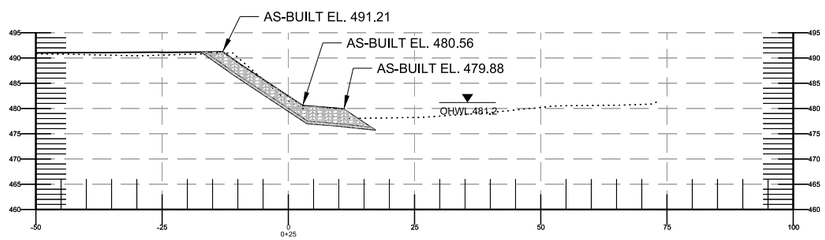

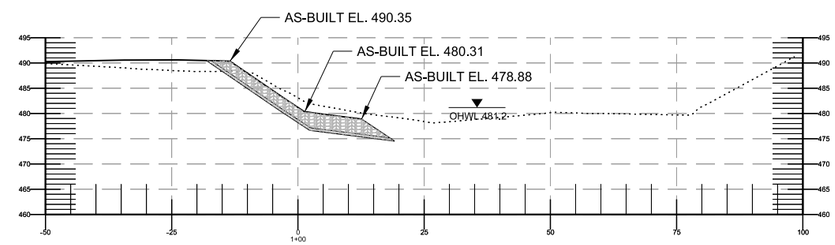

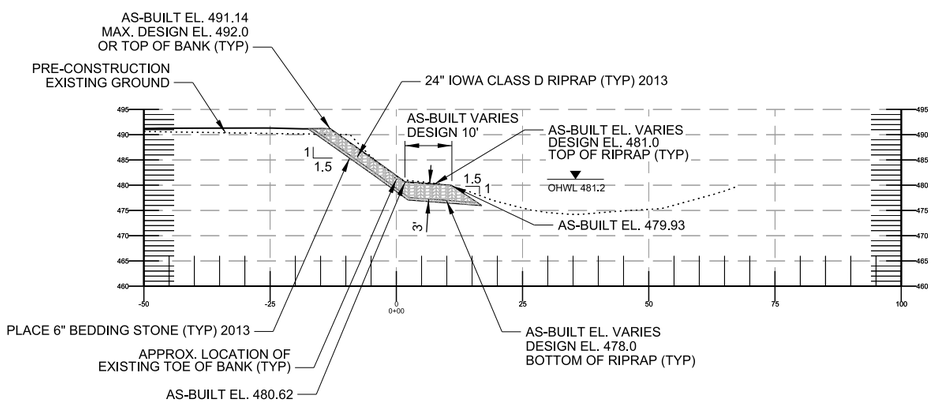

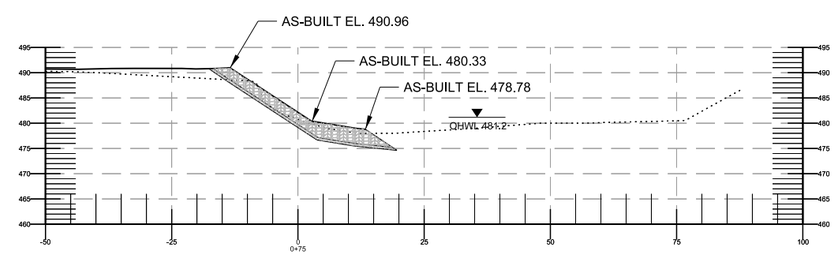

A1 FOX RIVER STREAMBANK PROTECTION - CROSS SECTIONS STA. 0+00 TO STA. 1+00

SCALE : 1"=15'-0"

0 15' 30'

US Army Corps of Engineers ®
Rock Island District

Symbol	Description	Date	Approved
1	AS-BUILT AS OF MARCH 31 2015 MOD-EA014 - NEW SHEET	25 JUL 12	ELS

Revisions

Designed By: PJV
Drawn By: JMF
Checked By: RCF
Reviewed By: HLA
Date: 2010/07/14
Scale: AS SHOWN
Project Code: EP98
Solicitation Number: W912EK-10-B-0025

U.S. ARMY ENGINEER DISTRICT
CORPS OF ENGINEERS
ROCK ISLAND, ILLINOIS

MISSISSIPPI RIVER
POOL 20 RM 358.5 TO 353.6
ALEXANDRIA, MO
FOX ISLAND HREP O & M MANUAL

FOX RIVER CROSS SECTIONS

Sheet Reference Number:
PLATE 25

B5ECD.MF
1/11/2016
PLATE 25.dgn

GENERAL SHEET NOTES

1. CUT MATERIAL TO BE HAULED TO BORROW AREA, GRADED, AND SEEDED.
2. THE STREAMBANK PROTECTION RIPRAP (IA CLASS D) SHALL TIE-IN TO THE STOPLOG C RIPRAP (IA CLASS E) WITHIN 7.5' OF THE CULVERT CENTERLINE.
3. ALL AS-BUILT ELEVATIONS ARE FROM SURVEY DONE IN 2013 / 2014.

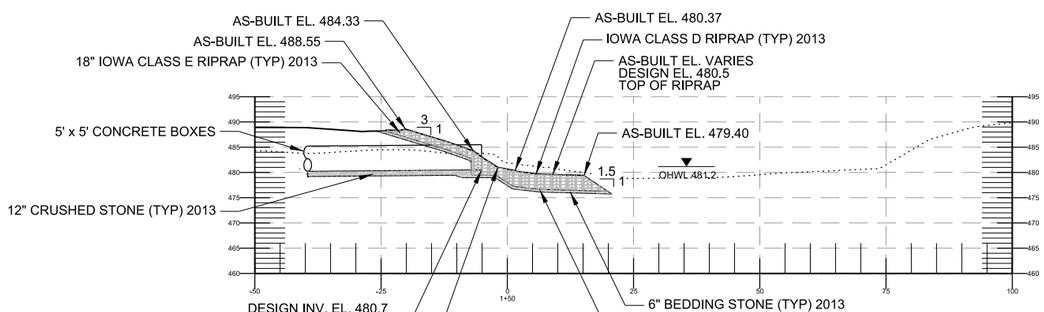

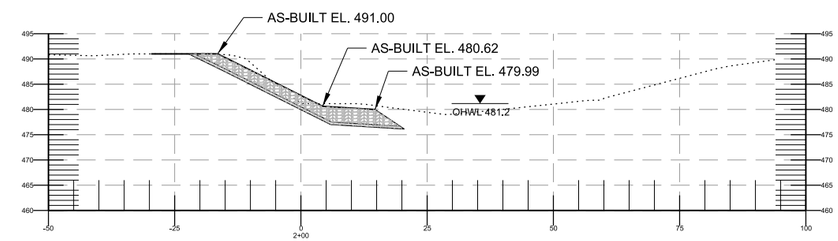

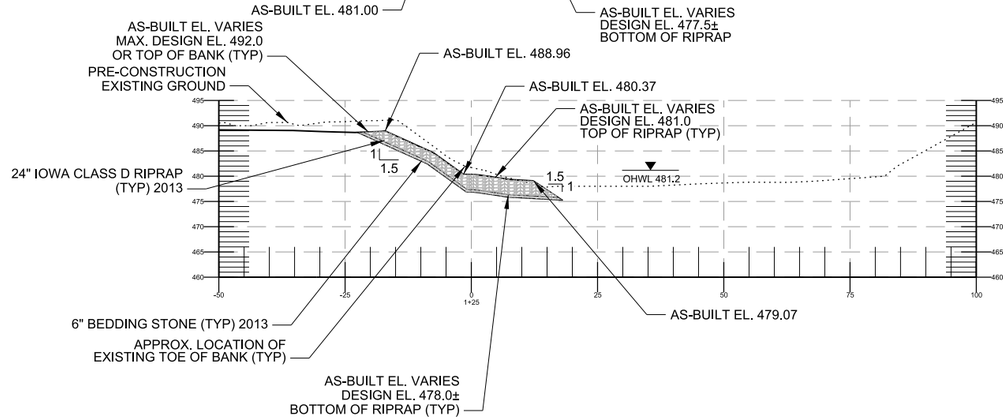

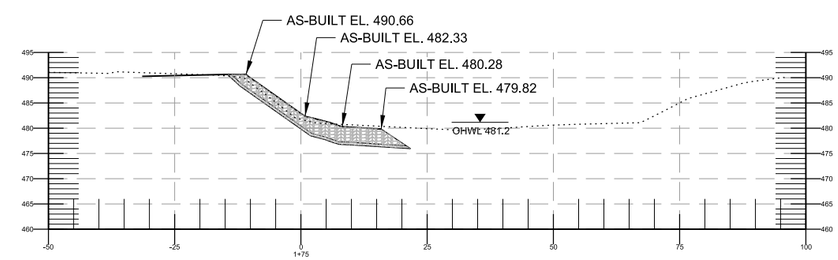

A1 FOX RIVER STREAMBANK PROTECTION - CROSS SECTIONS STA. 1+25 TO STA. 2+00

SCALE : 1"=15'-0"

0 15' 30'

US Army Corps of Engineers ®
Rock Island District

Symbol	Description	Date	Approved
1	AS-BUILT AS OF MARCH 31 2016 MOD-EA014 - NEW SHEET	25 JULY 12	ELS

Revisions

Designed By: PJV
Drawn By: JMF
Checked By: RCF
Reviewed By: HLA
Date: 2010/07/14
Scale: AS SHOWN
Project Code: EP98
Solicitation Number: W912EK-10-B-0025

U.S. ARMY ENGINEER DISTRICT
CORPS OF ENGINEERS
ROCK ISLAND, ILLINOIS

MISSISSIPPI RIVER
POOL 20 RM 358.5 TO 353.6
ALEXANDRIA, MO
FOX ISLAND HREP O & M MANUAL

FOX RIVER CROSS SECTIONS

Sheet Reference Number:
PLATE 26

B5ECD.JMF
1/11/2016
PLATE 26.dgn

GENERAL SHEET NOTES

1. CUT MATERIAL TO BE HAULED TO BORROW AREA, GRADED, AND SEEDED.
2. THE STREAMBANK PROTECTION RIPRAP (IA CLASS D) SHALL TIE-IN TO THE STOPLOG C RIPRAP (IA CLASS E) WITHIN 7.5' OF THE CULVERT CENTERLINE.

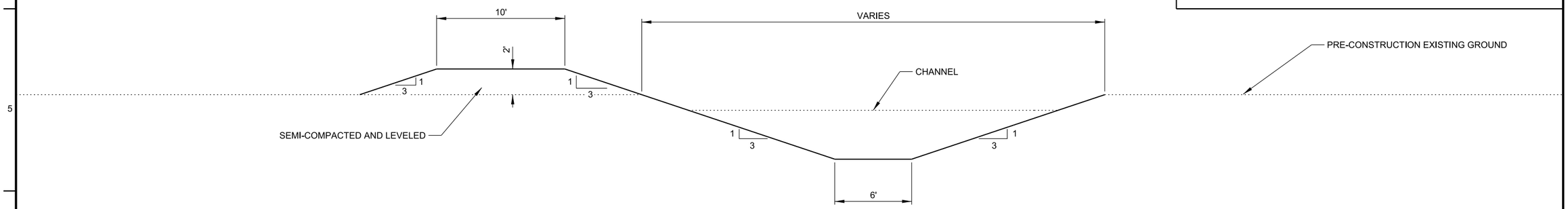

A4 2' SIDECAST BERM SECTION - CHANNEL A ~~STA. 10+00 TO STA. 17+00~~ AS-BUILT STA. 16+20± TO STA. 17+00

SCALE : 1"=4'-0"

0 4' 8'

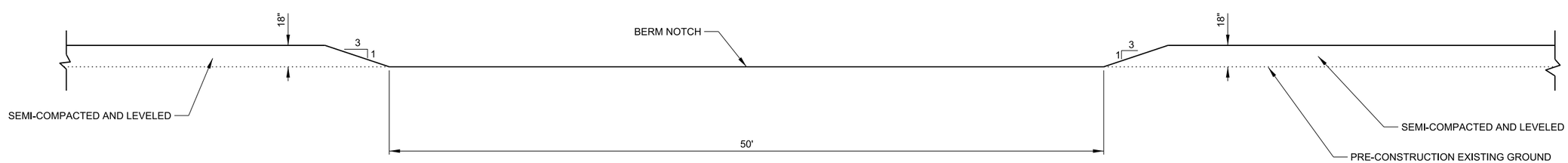

A1 SIDECAST BERM NOTCH SECTION - CHANNEL A APPROXIMATE LOCATION ~~STA. 4+00 AND STA. 9+00~~ AS-BUILT STA. 9+00± AND 14+00±

SCALE : 1"=40'-0"

0 40' 80'

US Army Corps of Engineers ®
Rock Island District

Symbol	Description	Date	Approved
1	AS-BUILT AS OF MARCH 31 2015 MOD-EA023 - NEW SHEET	25 JUL 12	ELS

Revisions

Designed By: PJV
Drawn By: JMF
Checked By: RCF
Reviewed By: HLA
Date: 2010/07/14
Scale: AS SHOWN
Project Code: EP98
Solicitation Number: W912EK-10-B-0025

U.S. ARMY ENGINEER DISTRICT
CORPS OF ENGINEERS
ROCK ISLAND, ILLINOIS

MISSISSIPPI RIVER
POOL 20 RM 358.5 TO 353.6
ALEXANDRIA, MO
FOX ISLAND HREP O & M MANUAL

SIDE CAST BERM SECTIONS

Sheet Reference Number:
PLATE 27

B5ECD.MF
1/11/2016
PLATE 27.dgn

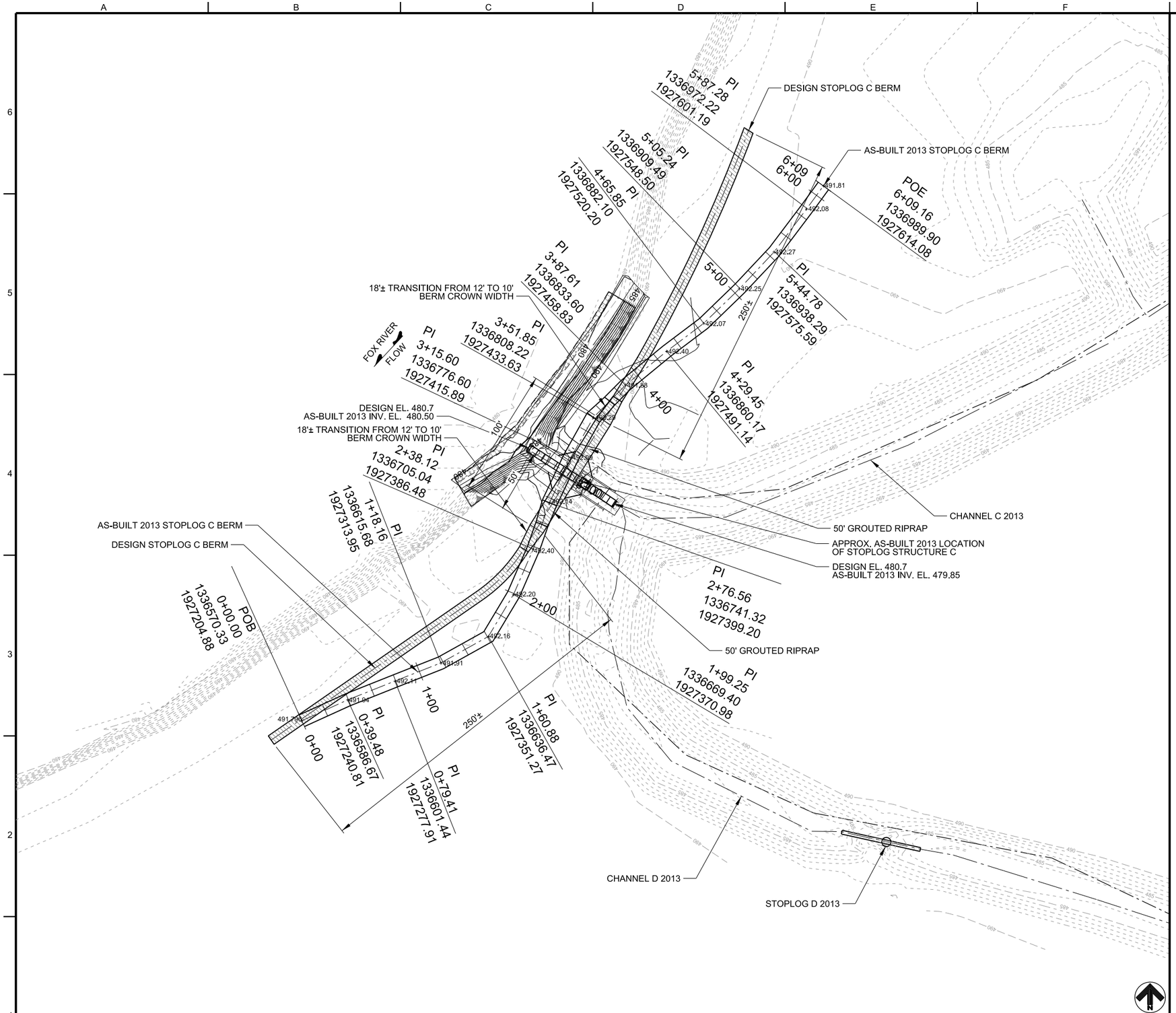

A1 STOPLOG C BERM PLAN

SCALE : 1"=40'-0" 0 40' 80'

US Army Corps of Engineers ®
Rock Island District

Symbol	Description	Date	Approved
1	AS-BUILT AS OF MARCH 31 2015 MOD-EA025 - NEW SHEET	10 OCT 13	ELS

Revisions

Designed By: PJV
Drawn By: JMF
Checked By: RCF
Reviewed By: HLA
Date: 2010/07/14
Scale: AS SHOWN
Project Code: EP98
Solicitation Number: W912EK-10-B-0025

U.S. ARMY ENGINEER DISTRICT
CORPS OF ENGINEERS
ROCK ISLAND, ILLINOIS

MISSISSIPPI RIVER
POOL 20 RM 358.5 TO 353.6
ALEXANDRIA, MO
FOX ISLAND HREP O & M MANUAL

STOPLOG C BERM PLAN

Sheet Reference Number:
PLATE 28

B5ECD JMF
1/11/2016
PLATE 28.dgn

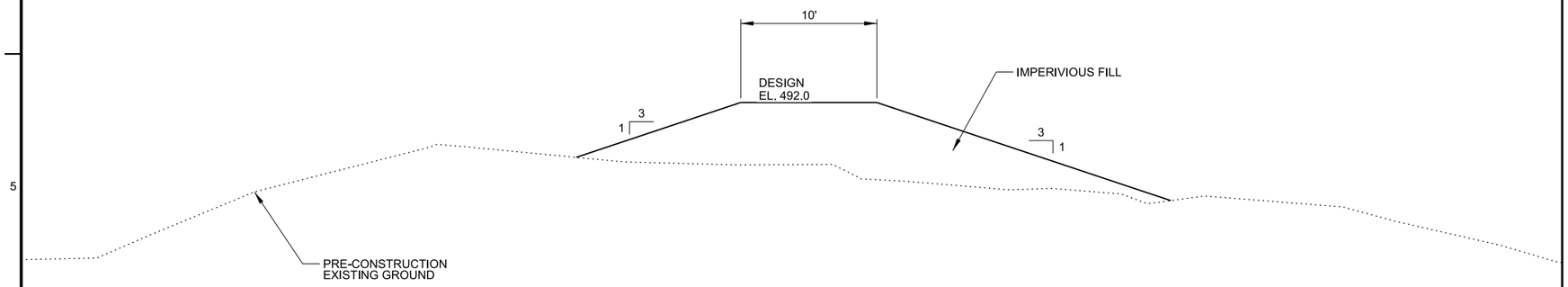

A4 TYPICAL BERM SECTION

SCALE : 1"=5'-0" 0 5' 10'

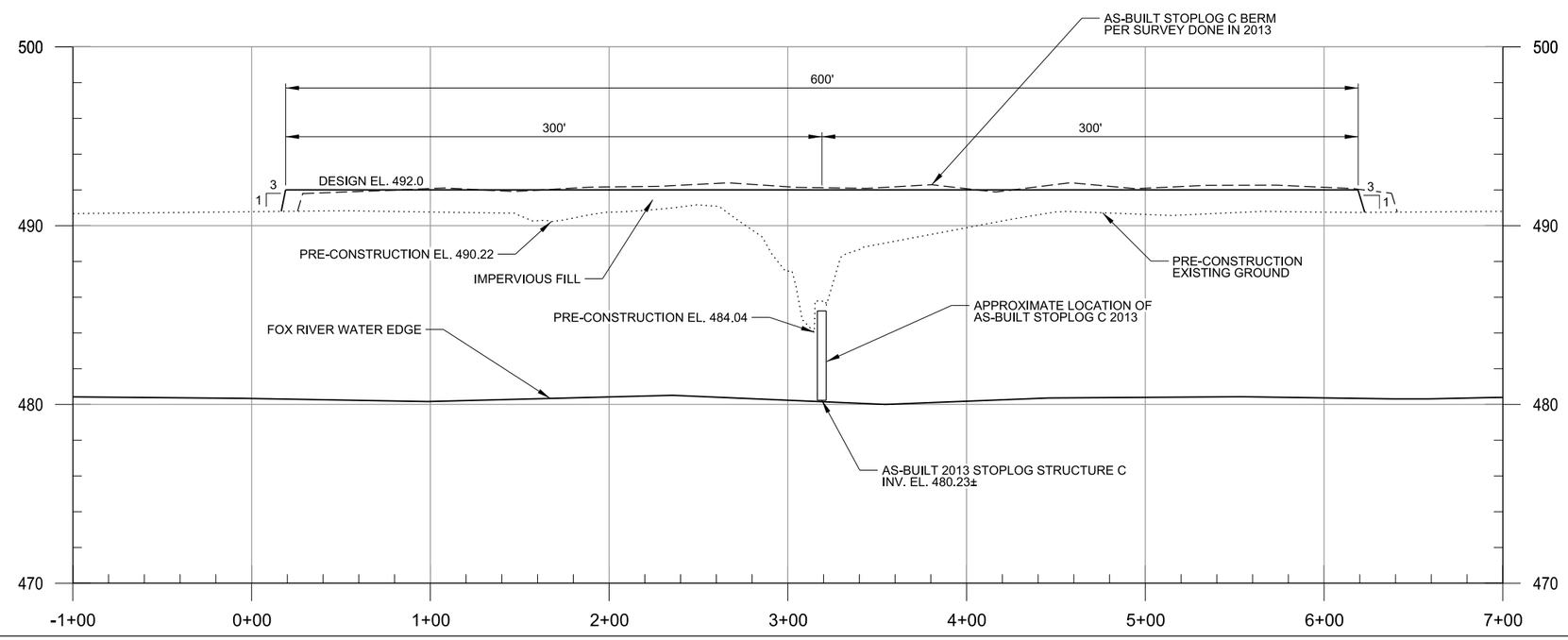

A1 STOPLOG C BERM PROFILE

SCALE : 1"=40'-0" 0 40' 80'

B5ECD.MF
1/11/2016
PLATE 29.dgn

US Army Corps of Engineers®
Rock Island District

Symbol	Description	Date	Approved
1	AS-BUILT AS OF MARCH 31 2015 MOD-EA025 - NEW SHEET	10 OCT 13	ELS

Revisions

Designed By: PJV
Drawn By: JMF
Checked By: RCF
Reviewed By: HLA
Date: 2010/07/14
Scale: AS SHOWN
Project Code: EP98
Solicitation Number: W912EK-10-B-0025

U.S. ARMY ENGINEER DISTRICT
CORPS OF ENGINEERS
ROCK ISLAND, ILLINOIS

MISSISSIPPI RIVER
POOL 20 RM 356.5 TO 353.6
ALEXANDRIA, MO
FOX ISLAND HREP O & M MANUAL

STOPLOG C BERM PROFILE AND TYPICAL SECTION

Sheet Reference Number:
PLATE 29

NOTE:

1. ALL AS-BUILT ELEVATIONS ARE FROM SURVEY DONE ON 2013 / 2014.

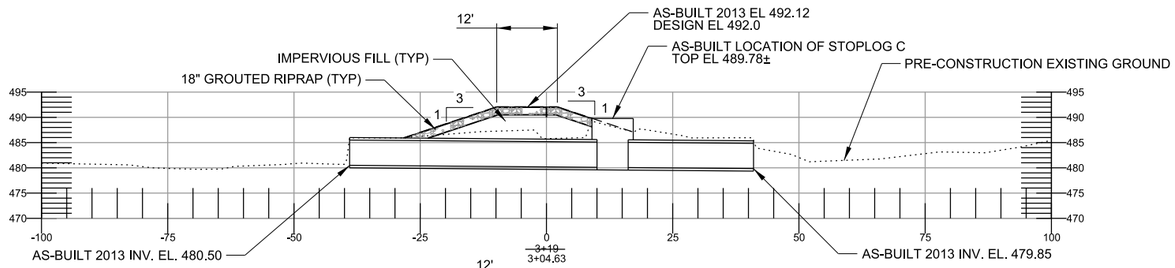

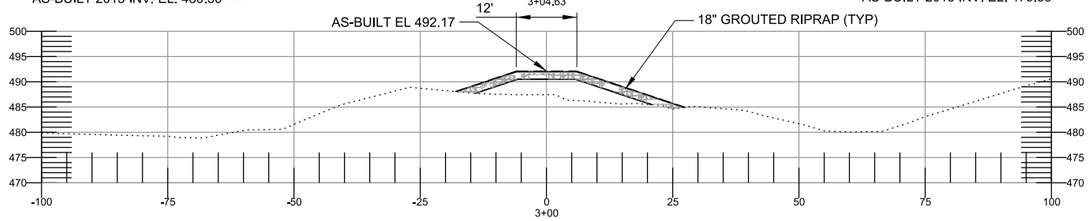

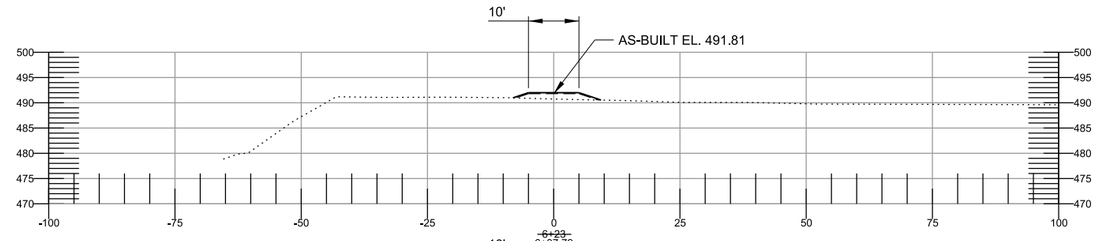

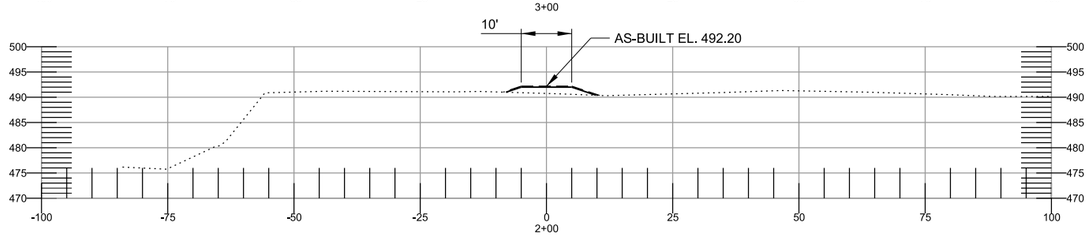

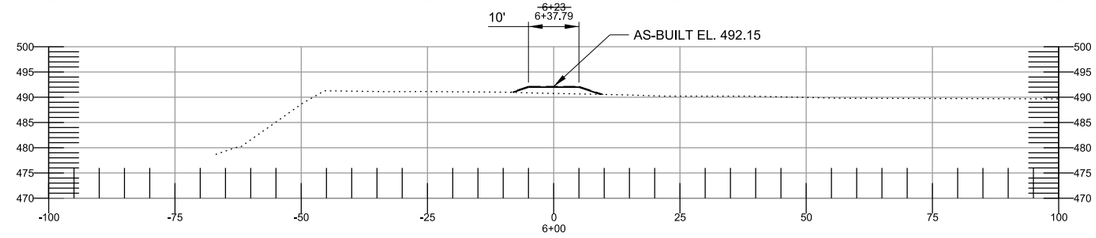

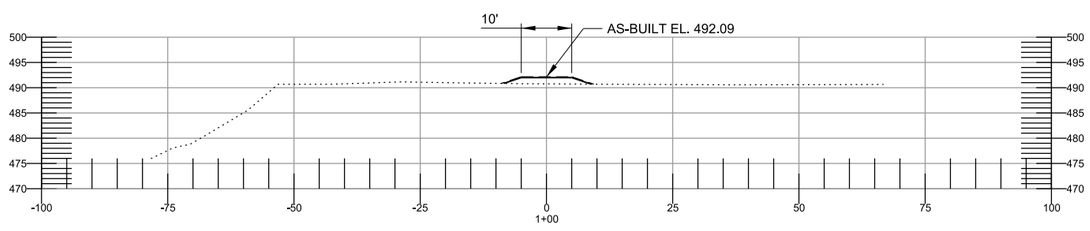

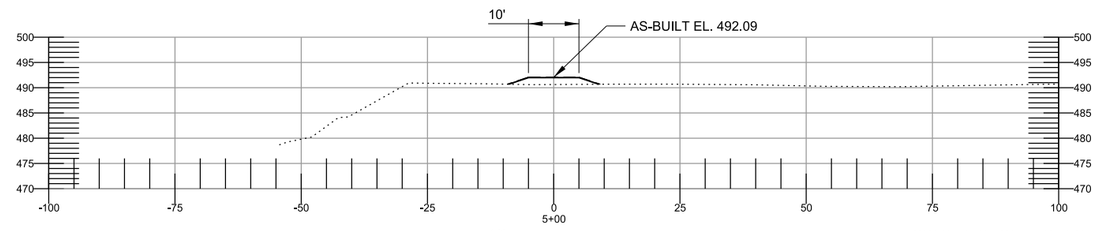

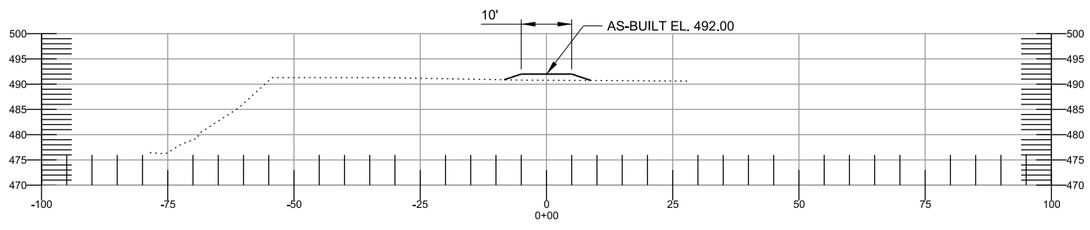

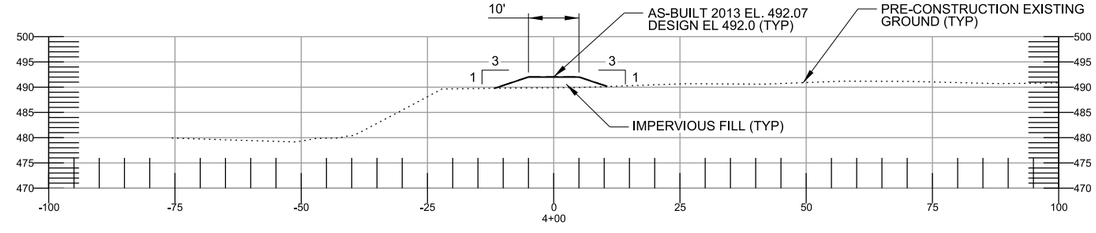

A1 STOPLOG C BERM CROSS SECTIONS

SCALE : 1"=15'-0"

0 15' 30'

US Army Corps of Engineers ®
Rock Island District

Symbol	Description	Date	Approved
1	AS-BUILT AS OF MARCH 31 2015 MOD-EA025 - NEW SHEET	10 OCT 13	ELS

Revisions

Designed By: PJV
Date: 2010/07/14
Drawn By: JMF
Scale: AS SHOWN
Checked By: RCF
Project Code: EP98
Reviewed By: HLA
Solicitation Number: W912EK-10-B-0025

U.S. ARMY ENGINEER DISTRICT
CORPS OF ENGINEERS
ROCK ISLAND, ILLINOIS

MISSISSIPPI RIVER
POOL 20 RM 358.5 TO 353.6
ALEXANDRIA, MO
FOX ISLAND HREP O & M MANUAL

STOPLOG C BERM CROSS SECTIONS

Sheet Reference Number:
PLATE 30

B5ECD.JMF
1/11/2016
PLATE 30.dgn

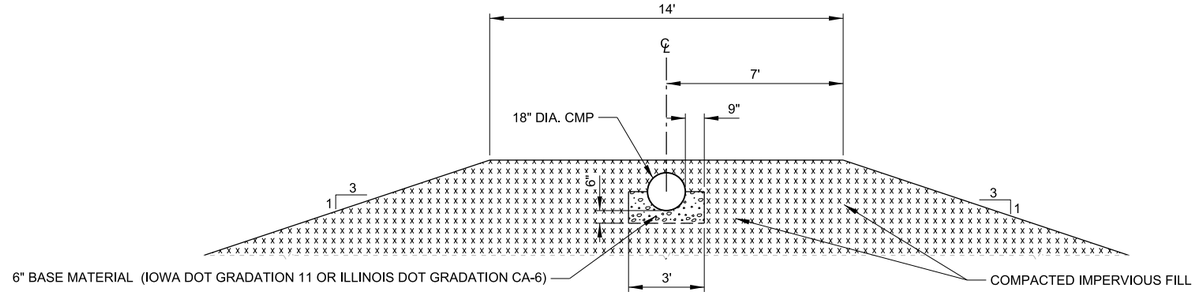

A5 (C) ROCK - LINED DITCH - SECTION

SCALE : 1"=3'-0"

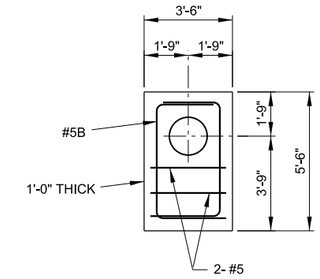

G5 (D) CULVERT COLLAR DETAILS

SCALE : 1"=3'-0"

NOTE: 1

1. TRASH RACK SHALL MEET THE FOLLOWING REQUIREMENTS: 18" STEEL PIPE TRASH GUARD, BAR SIZE OF ¼", MAXIMUM SPACING OF 6" x 8". DESIGN BASIS IS ITEM #TGCMP18 FROM HAALA INDUSTRIES, INC.

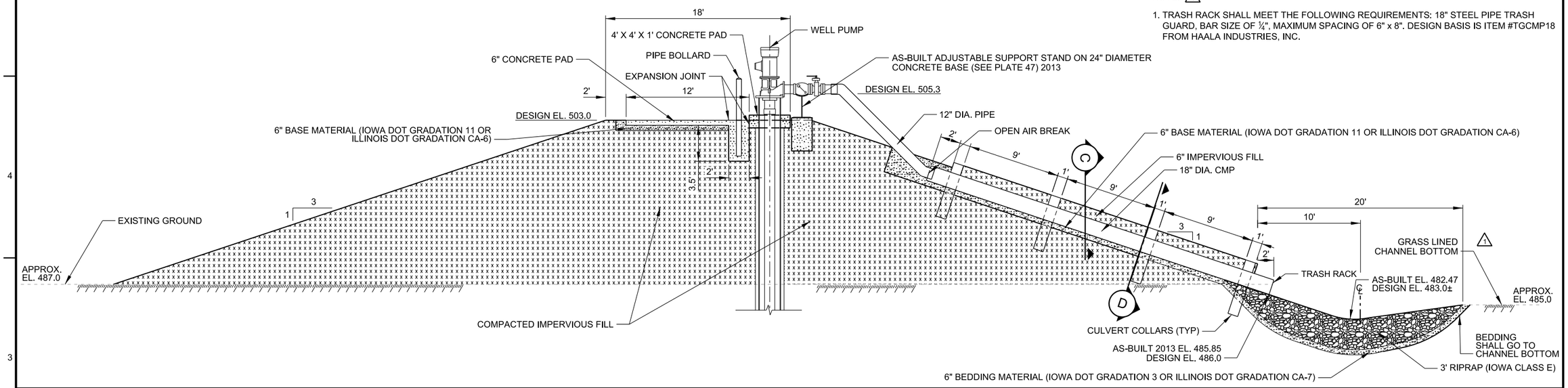

A3 (A) WELL H UNIT - SECTION

SCALE : 1"=5'-0"

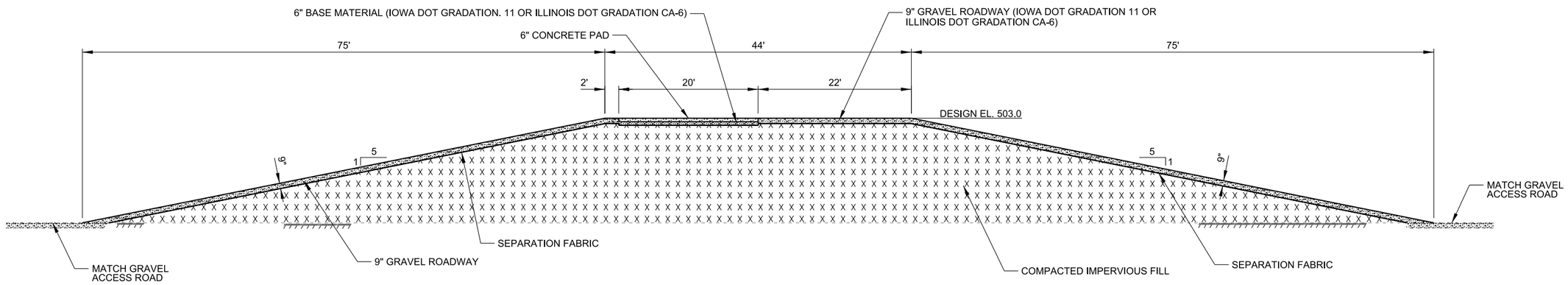

A1 (B) ROADWAY - SECTION

SCALE : 1"=8'-0"

US Army Corps of Engineers ®
Rock Island District

Symbol	Description	Date	Approved
1	AS-BUILT AS OF MARCH 31 2015 MOD EA007 - WELL H STILLING BASIN ELEVATION CHANGES	28 FEB 12	ELS/HLA

Revisions

Designed By: PJV	Date: 2010/07/14		
Drawn By: JMF	Scale: AS SHOWN		
Checked By: RCF	Project Code: EP98		
Reviewed By: HLA	Solicitation Number: W912EK-10-B-0025		

U.S. ARMY ENGINEER DISTRICT
CORPS OF ENGINEERS
ROCK ISLAND, ILLINOIS

MISSISSIPPI RIVER
POOL NO. 19 RM 343.5 TO 353.6
ALEXANDRIA, MO
FOX ISLAND HREP O & M MANUAL

WELL H AND TURNAROUND SECTION DETAILS

Sheet Reference Number:
PLATE 31

BSECOJMF
1/11/2016
PLATE 31.dgn

GENERAL SHEET NOTES

1. TRASH RACK SHALL MEET THE FOLLOWING REQUIREMENTS: 18" STEEL PIPE TRASH GUARD, BAR SIZE OF 1/4", MAXIMUM SPACING OF 6" x 8". DESIGN BASIS IS ITEM #TGCMP18 FROM HAALA INDUSTRIES, INC.

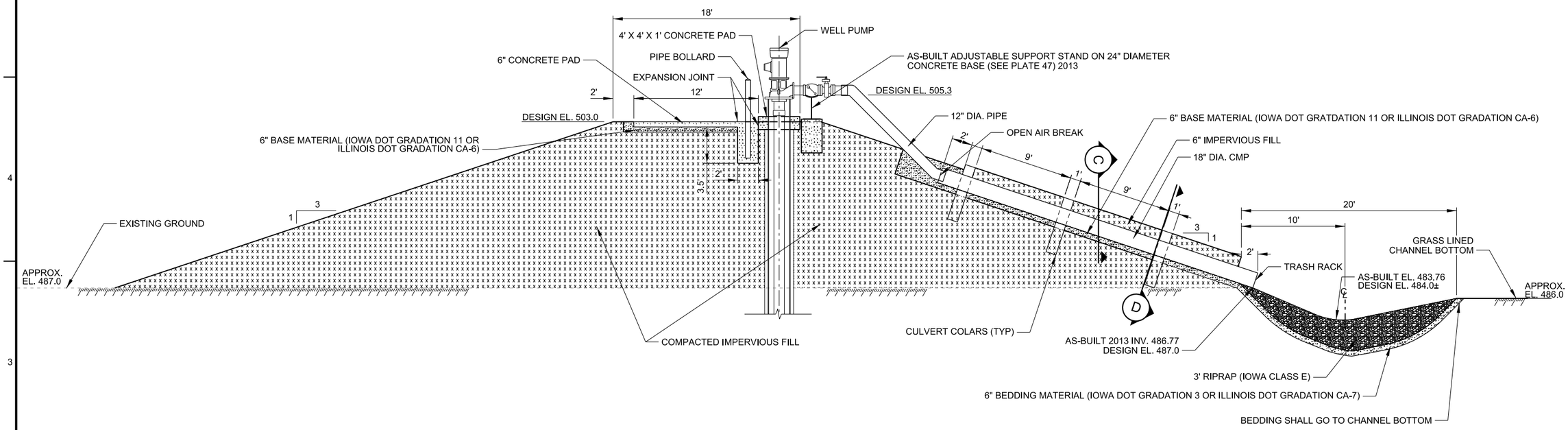

A1 (A) WELL G UNIT - SECTION

SCALE : 1"=5'-0" 0 5' 10'

US Army Corps of Engineers ®
Rock Island District

Symbol	Description	Date	Approved
	AS-BUILT AS OF MARCH 31 2015	28 FEB 12	ELS/HLA
	MOD EA007 - NEW SHEET ADDED		

Revisions

Designed By: ELS	Date: 2012/02/28		
Drawn By: EJJ	Scale: AS SHOWN		
Checked By: RCF	Project Code: EP98		
Reviewed By: HLA	Solicitation Number: W912EK-10-B-0025		

U.S. ARMY ENGINEER DISTRICT
CORPS OF ENGINEERS
ROCK ISLAND, ILLINOIS

MISSISSIPPI RIVER
POOL NAVIGATION 353.6
ALEXANDRIA, MO
FOX ISLAND HREP O & M MANUAL

WELL G
UNIT - SECTION

Sheet Reference Number:
PLATE 31.1

BSECDJMF
1/11/2016
PLATE 31.1.dgn

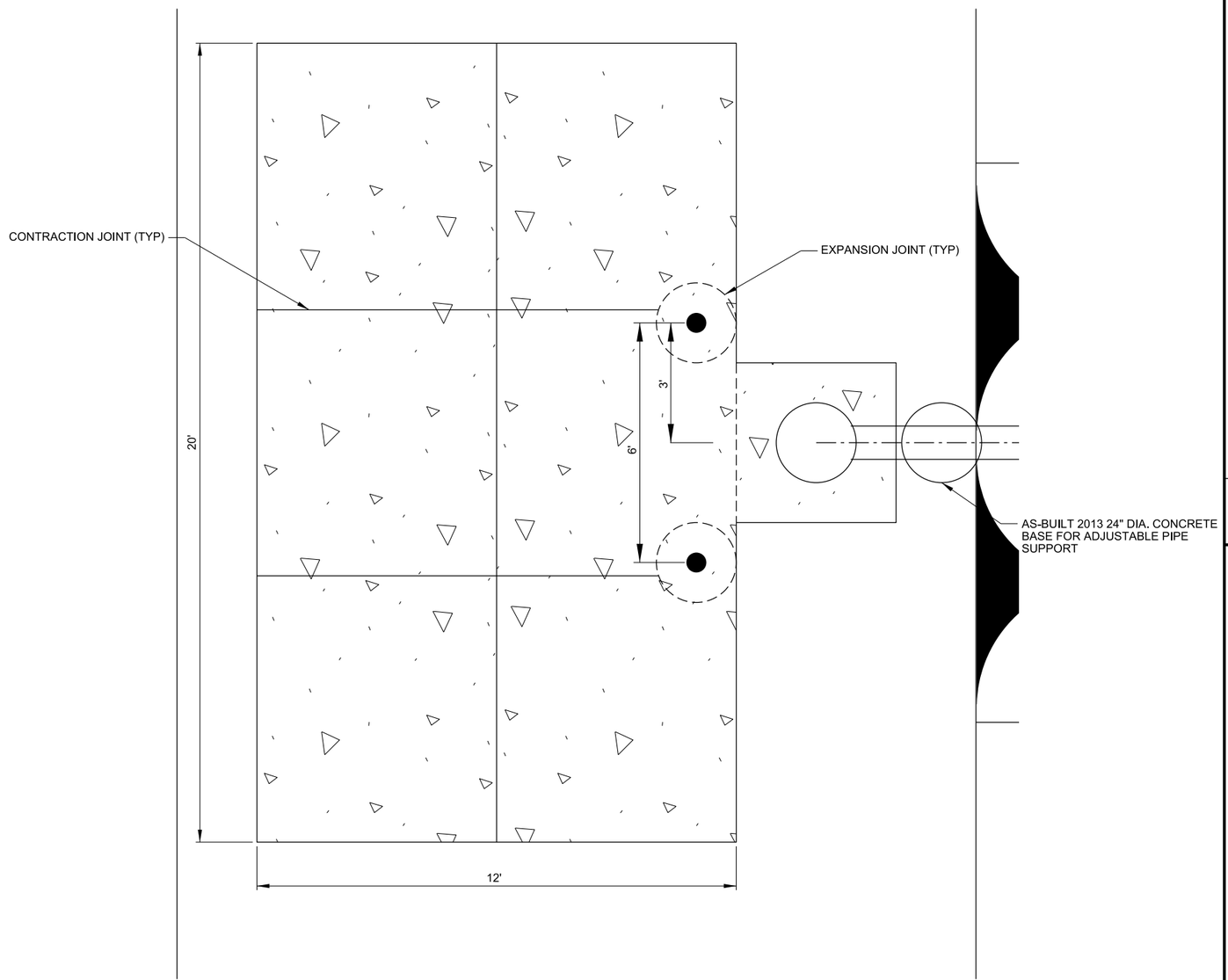

A1 (3) CONCRETE PAD

SCALE : NO SCALE

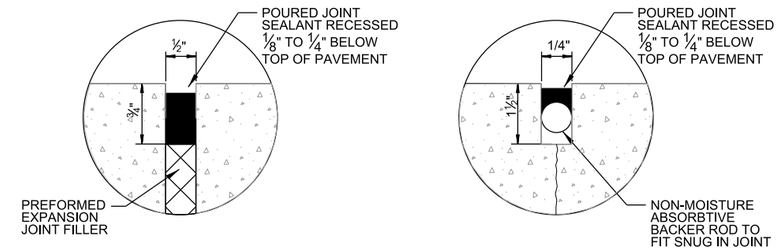

EXPANSION JOINT SEALANT

CONTRACTION JOINT SEALANT

NOTE: ALL JOINTS SHALL BE SAWCUT.

F4 (3) JOINT SEALANT DETAILS

SCALE : NO SCALE

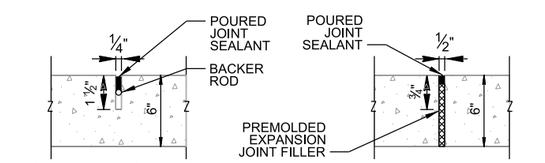

CONTRACTION JOINT

EXPANSION JOINT

F1 (1) TYPICAL CONCRETE JOINT DETAILS

SCALE : NO SCALE

US Army Corps of Engineers ®
Rock Island District

Symbol	Description	Date	Approved
	AS-BUILT AS OF MARCH 31 2015		

Revisions

Designed By: PJV		Date: 2010/07/14	
Drawn By: JMF		Scale: AS SHOWN	
Checked By: RCF		Project Code: EP98	
Reviewed By: HLA		Solicitation Number: W912EK-10-B-0025	

U.S. ARMY ENGINEER DISTRICT
CORPS OF ENGINEERS
ROCK ISLAND, ILLINOIS

MISSISSIPPI RIVER
POOL 20 NAVIGATION
ALEXANDRIA, MO
FOX ISLAND HREP O & M MANUAL

CONCRETE DETAILS

Sheet Reference Number:
PLATE 32

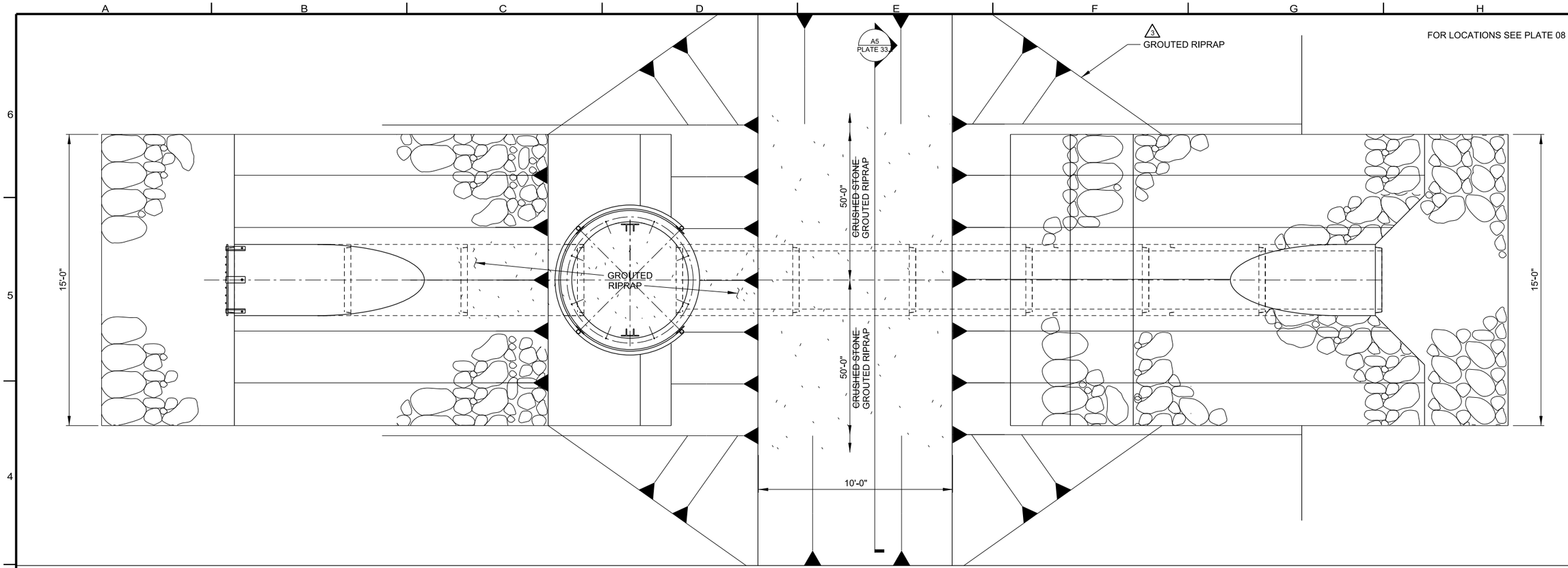

A4 PLAN (STIOPLOG STRUCTURES A, B, D, & E)

SCALE : 1"=4'-0"

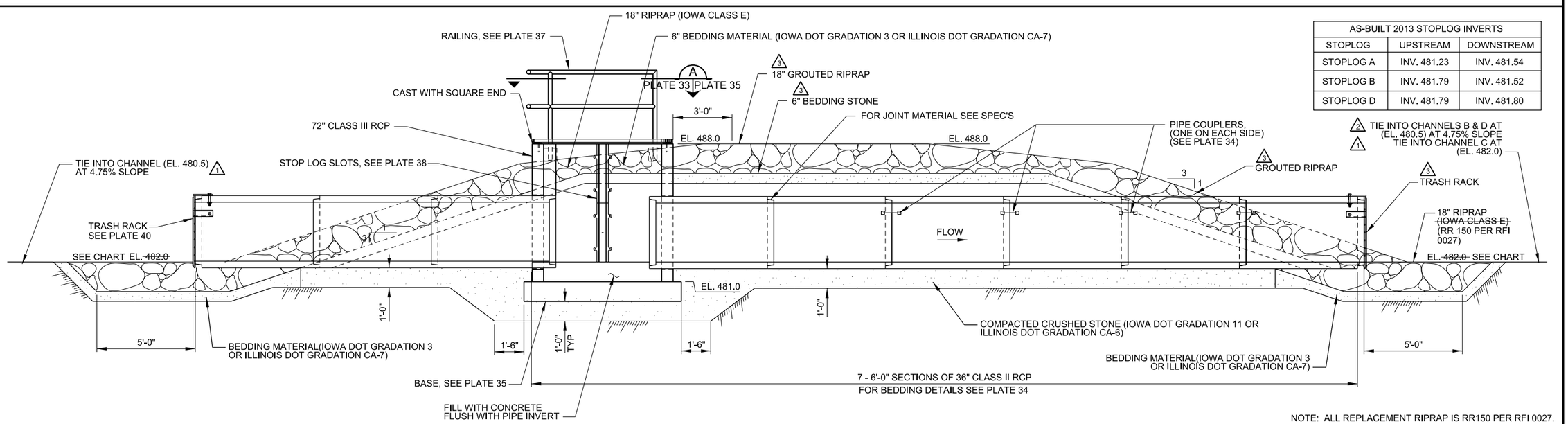

AS-BUILT 2013 STOPLOG INVERTS		
STOPLOG	UPSTREAM	DOWNSTREAM
STOPLOG A	INV. 481.23	INV. 481.54
STOPLOG B	INV. 481.79	INV. 481.52
STOPLOG D	INV. 481.79	INV. 481.80

NOTE: ALL REPLACEMENT RIPRAP IS RR150 PER RFI 0027.

A1 ELEVATION (STOPLOG STRUCTURES A, B, & D)

SCALE : 1"=4'-0"

US Army Corps of Engineers
Rock Island District

Symbol	Description	Date	Approved
	AS-BUILT AS OF MARCH 31 2015		
4	MOD EA023 - GROUTED RIPRAP	4 OCT 13	ELS/HLA
3	MOD EA010 - STOPLOG ELEVATION NOTE CHANGES	12 MAR 12	ELS/HLA
2	MOD EA007 - STOPLOG ELEVATION CHANGES	28 FEB 12	ELS/HLA

Revisions

Date:	2010/07/14
Scale:	AS SHOWN
Project Code:	EP98
Solicitation Number:	W912EK-10-B-0025
Designed By:	CHJ
Drawn By:	DGP
Checked By:	BTJ
Reviewed By:	FRJ

U.S. ARMY ENGINEER DISTRICT
CORPS OF ENGINEERS
ROCK ISLAND, ILLINOIS

MISSISSIPPI RIVER
POOL NAVIGATION RM 553.6
ALEXANDRIA, MO
FOX ISLAND HREP O & M MANUAL

36" RCP STOPLOG

Sheet Reference Number:
PLATE 33

B5ECDJMF
1/11/2016
PLATE 33.dgn

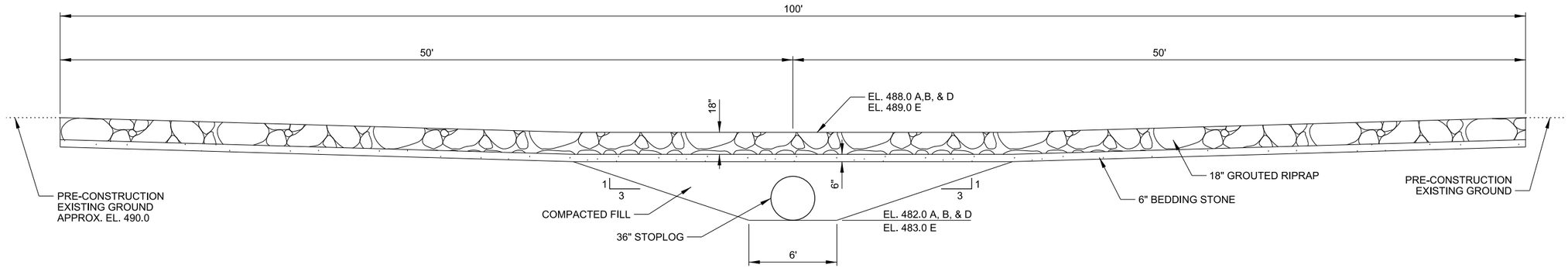

A5 CROSS SECTION (STOPLOG STRUCTURES A, B, AND E)

SCALE : 1"=4'-0"

0 4' 8'

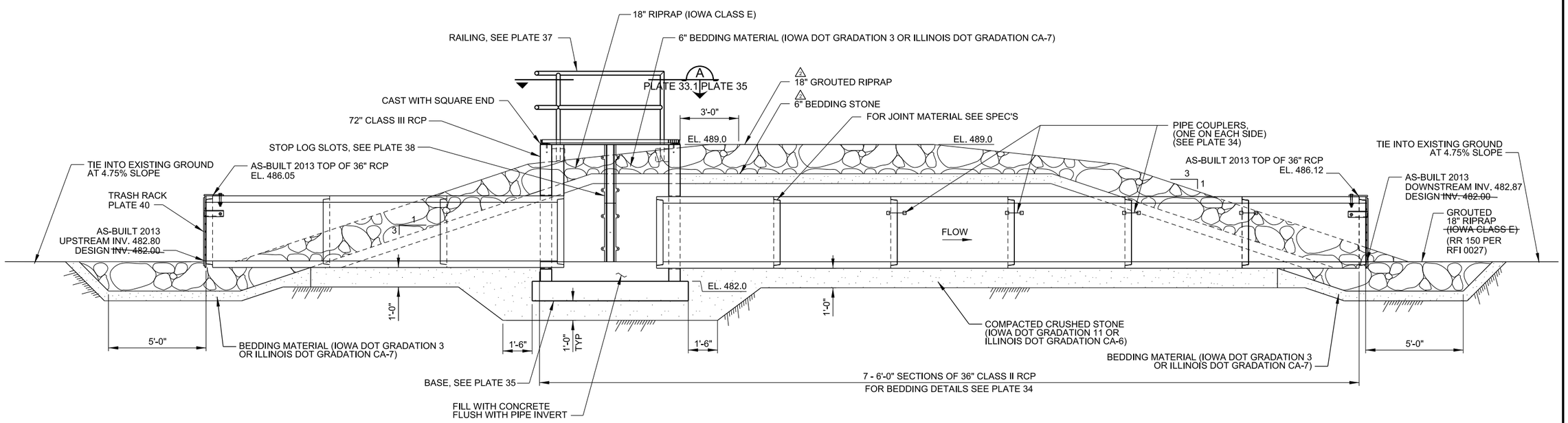

NOTE: ALL GROUTED RIPRAP IS RR 150 PER RFI 0027.

A1 ELEVATION (STOPLOG STRUCTURE E)

SCALE : 1"=4'-0"

0 4' 8'

US Army Corps of Engineers ®
Rock Island District

Symbol	Description	Date	Approved
2	AS-BUILT AS OF MARCH 31 2015	4 OCT 13	ELS/HLA
1	MOD EA023 - GROUTED RIPRAP AND CROSS SECTION	28 FEB 12	ELS/HLA
	MOD EA007 - NEW SHEET ADDED		

Revisions

Designed By: BCH
Drawn By: DGP/EJJ
Checked By: BTJ
Reviewed By: FRJ
Date: 2012/02/28
Scale: AS SHOWN
Project Code: EP98
Solicitation Number: W912EK-10-B-0025

U.S. ARMY ENGINEER DISTRICT
CORPS OF ENGINEERS
ROCK ISLAND, ILLINOIS

MISSISSIPPI RIVER
POOL 20 MILE 343.5 TO 353.6
ALEXANDRIA, MO
FOX ISLAND HREP O & M MANUAL

36" RCP STOPLOG

Sheet Reference Number:
PLATE 33.1

B5ECD.MF
1/11/2016
PLATE 33.1.dgn

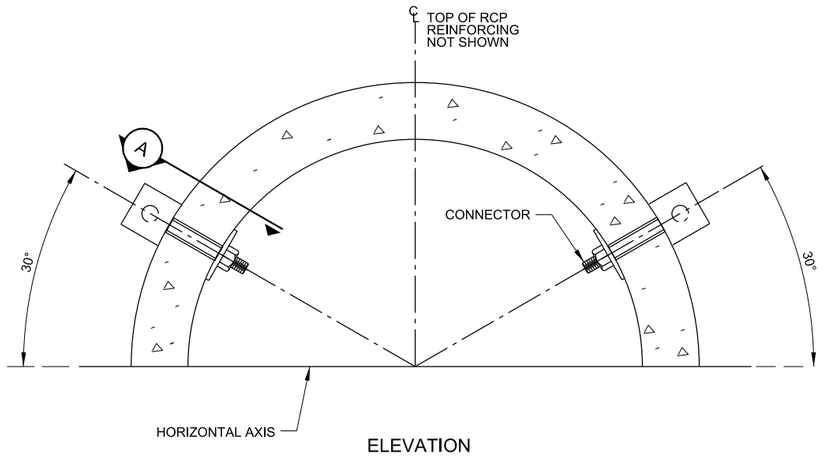

ELEVATION

NOTES:

1. GALVANIZE AFTER FABRICATION.
2. ALTERNATE PIPE CONNECTIONS MAY BE SUBMITTED FOR APPROVAL.

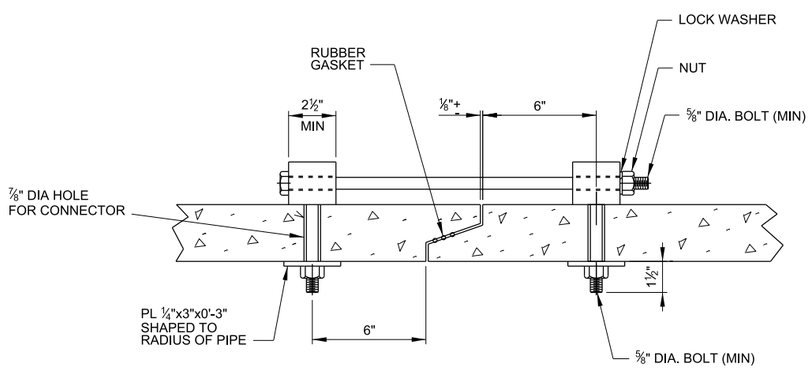

SECTION A

A1 PIPE CONNECTOR

SCALE : 3"=1'-0"

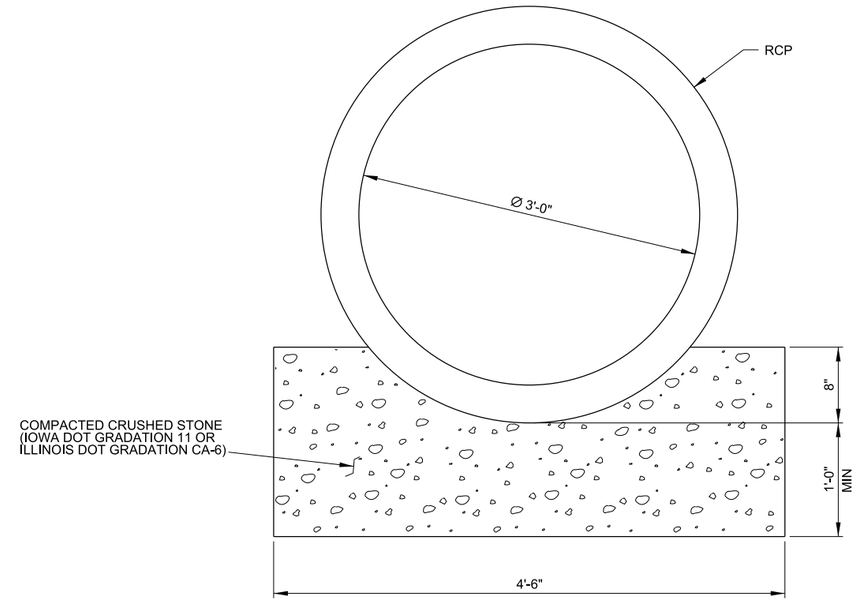

ELEVATION

E4 36" RCP BEDDING DETAIL

SCALE : 1 1/2"=1'-0"

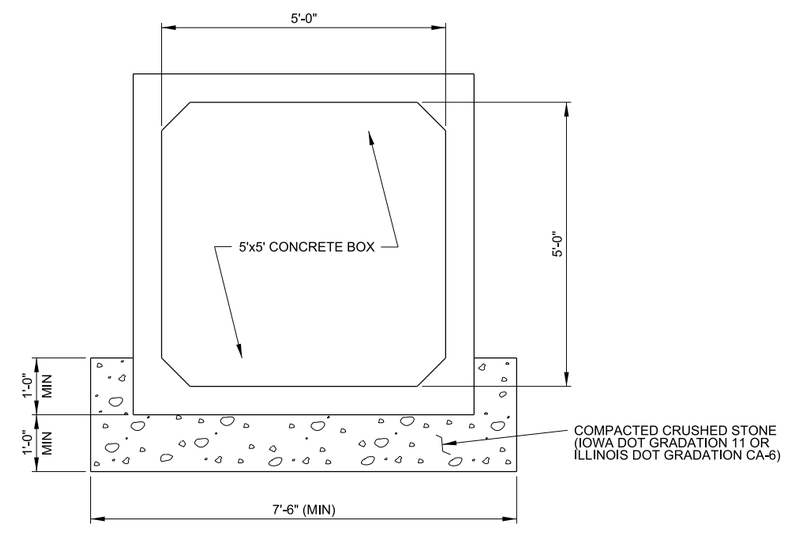

E1 5' x 5' CONCRETE BOX BEDDING DETAIL

SCALE : 3/4"=1'-0"

US Army Corps of Engineers ®
Rock Island District

Symbol	Description	Date	Approved
	AS-BUILT AS OF MARCH 31 2015		

Revisions

Designed By: CHJ	Date: 2010/07/14		
Drawn By: DGP	Scale: AS SHOWN		
Checked By: BTJ	Project Code: EP98		
Reviewed By: FRJ	Solicitation Number: W912EK-10-B-0025		

U.S. ARMY ENGINEER DISTRICT
CORPS OF ENGINEERS
ROCK ISLAND, ILLINOIS

MISSISSIPPI RIVER
POOL 20 MILE 343.5 TO 353.6
ALEXANDRIA, MO
FOX ISLAND HREP O & M MANUAL

36" RCP
MISCELLANEOUS
DETAILS

Sheet
Reference
Number:
PLATE 34

B5ECD.MF
1/11/2016
PLATE 34.dgn

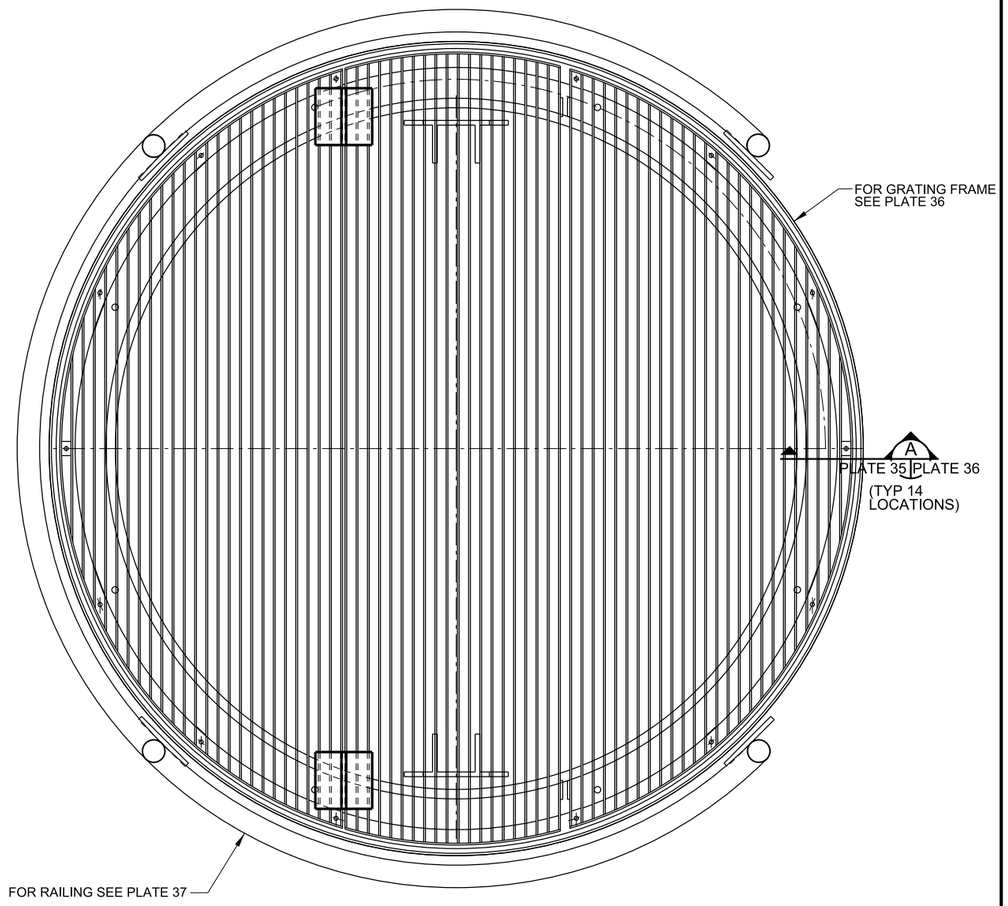

A1 (A) SECTION

SCALE : 1 1/2"=1'-0"

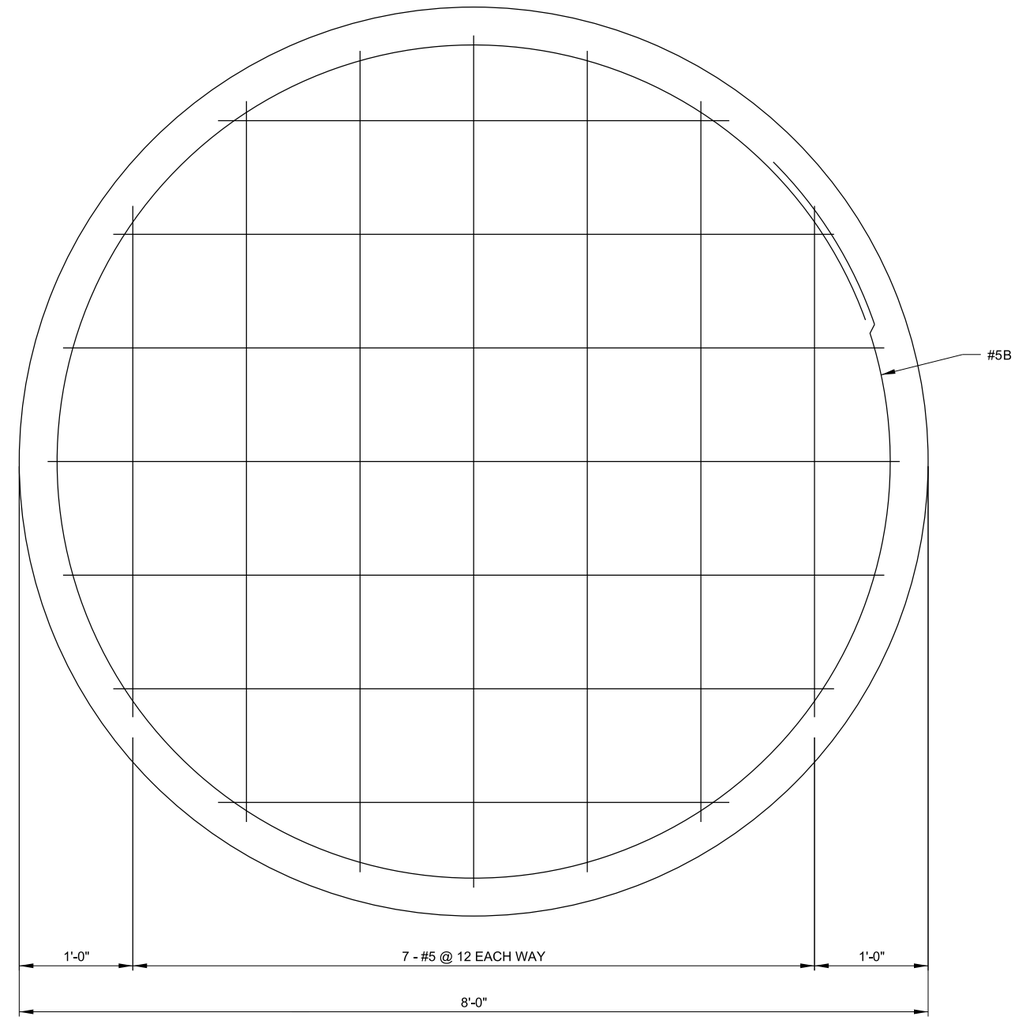

PLAN

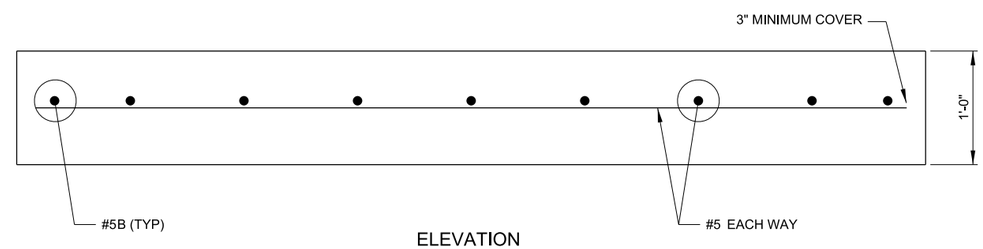

ELEVATION

E1 PRECAST OR CAST IN-PLACE BASE

SCALE : 1 1/2"=1'-0"

US Army Corps of Engineers ®
Rock Island District

Symbol	Description	Date	Approved
	AS-BUILT AS OF MARCH 31 2015		

Revisions

Designed By:	CHJ	Date:	2010/07/14
Drawn By:	DGP	Scale:	AS SHOWN
Checked By:	BTJ	Project Code:	EP98
Reviewed By:	FRJ	Solicitation Number:	W912EK-10-B-0025

U.S. ARMY ENGINEER DISTRICT
CORPS OF ENGINEERS
ROCK ISLAND, ILLINOIS

MISSISSIPPI RIVER
POOL 20 MILE 343.0 TO 353.6
ALEXANDRIA, MO
FOX ISLAND HREP O & M MANUAL

36" RCP
STRUCTURE
DETAILS I

Sheet
Reference
Number:
PLATE 35

B36ECD.MF
01/12/16
PLATE 35.dgn

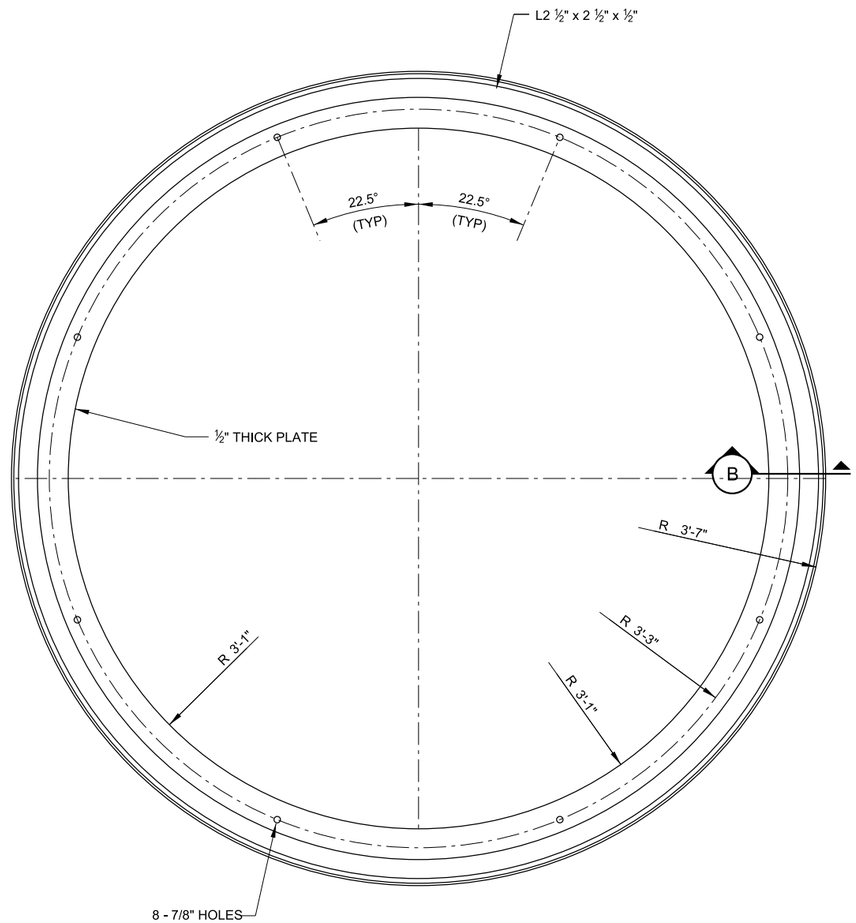

1 REQ'D / STRUCTURE
ASTM A36 STEEL - GALVANIZE AFTER FABRICATION

A3 GRATING FRAME

SCALE : 1 1/2"=1'-0"

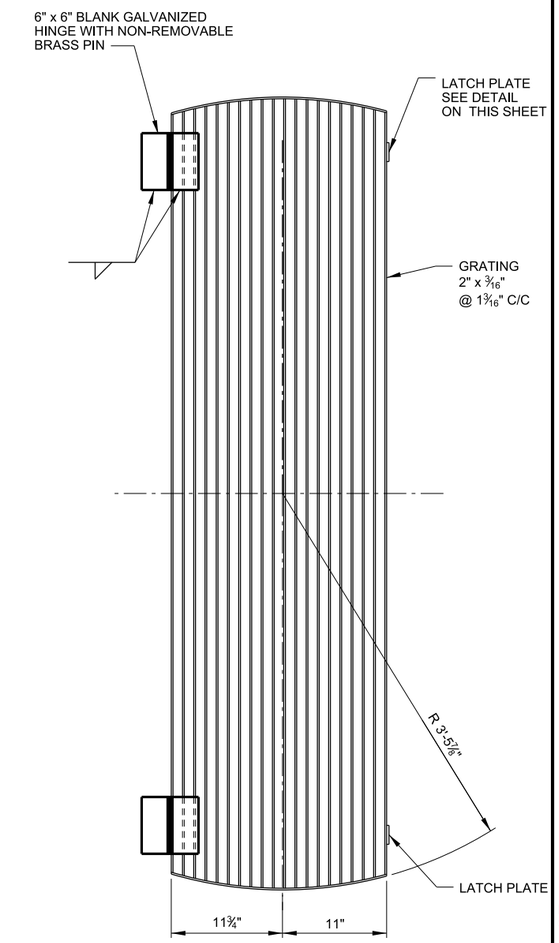

STEEL - 1 REQ'D / STRUCTURE

E3 CENTER GRADING DETAIL

SCALE : 1 1/2"=1'-0"

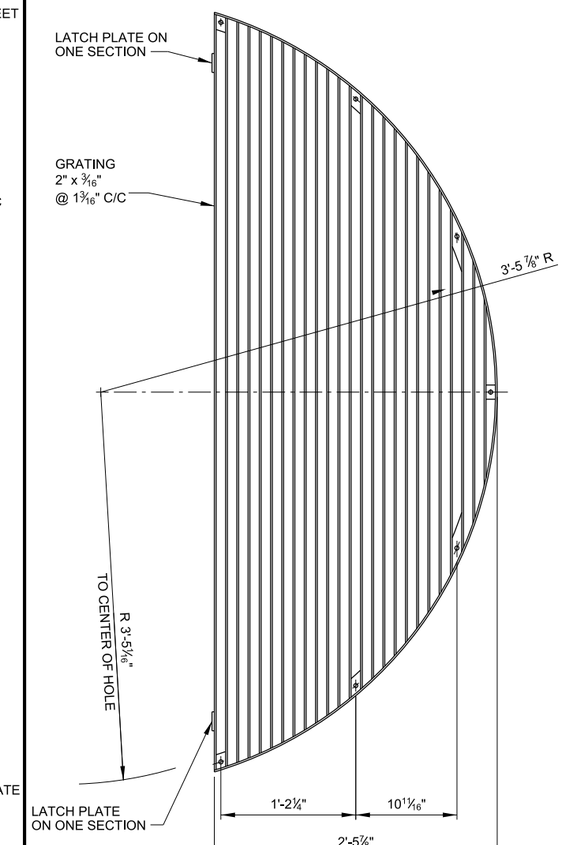

STEEL - 2 REQ'D / STRUCTURE

G3 END GRATING DETAIL

SCALE : 1 1/2"=1'-0"

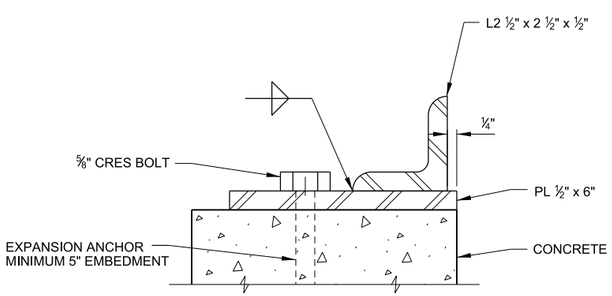

A1 (B) SECTION

SCALE : 6"=1'-0"

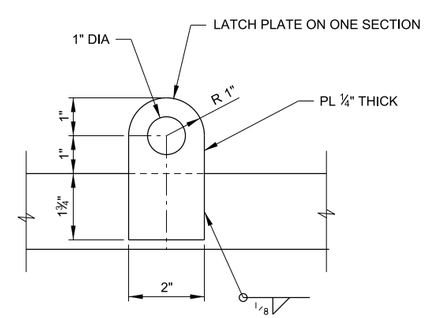

D1 LATCH PLATE DETAIL

SCALE : 6"=1'-0"

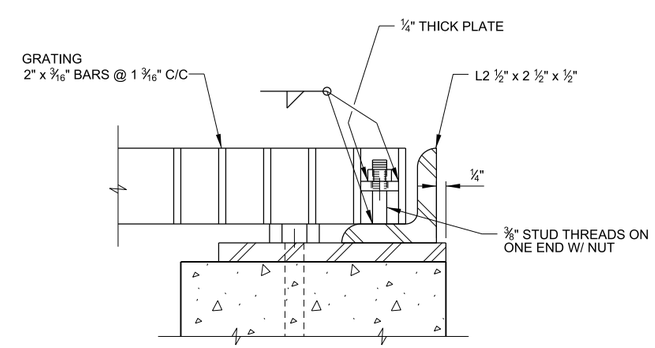

F1 (A) SECTION

SCALE : 6"=1'-0"

US Army Corps of Engineers ®
Rock Island District

Symbol	Description	Date	Approved
	AS-BUILT AS OF MARCH 31 2015		

Revisions

Designed By: CHJ	Date: 2010/07/14		
Drawn By: DGP	Scale: AS SHOWN		
Checked By: BTJ	Project Code: EP98		
Reviewed By: FRJ	Solicitation Number: W912EK-10-B-0025		

U.S. ARMY ENGINEER DISTRICT
CORPS OF ENGINEERS
ROCK ISLAND, ILLINOIS

MISSISSIPPI RIVER
POOL 20 MM 583.0 TO 583.6
ALEXANDRIA, MO
FOX ISLAND HREP O & M MANUAL

36" RCP
STRUCTURE
DETAILS II

Sheet
Reference
Number:
PLATE 36

B36ECD.MF
01/12/16
PLATE 36.dgn

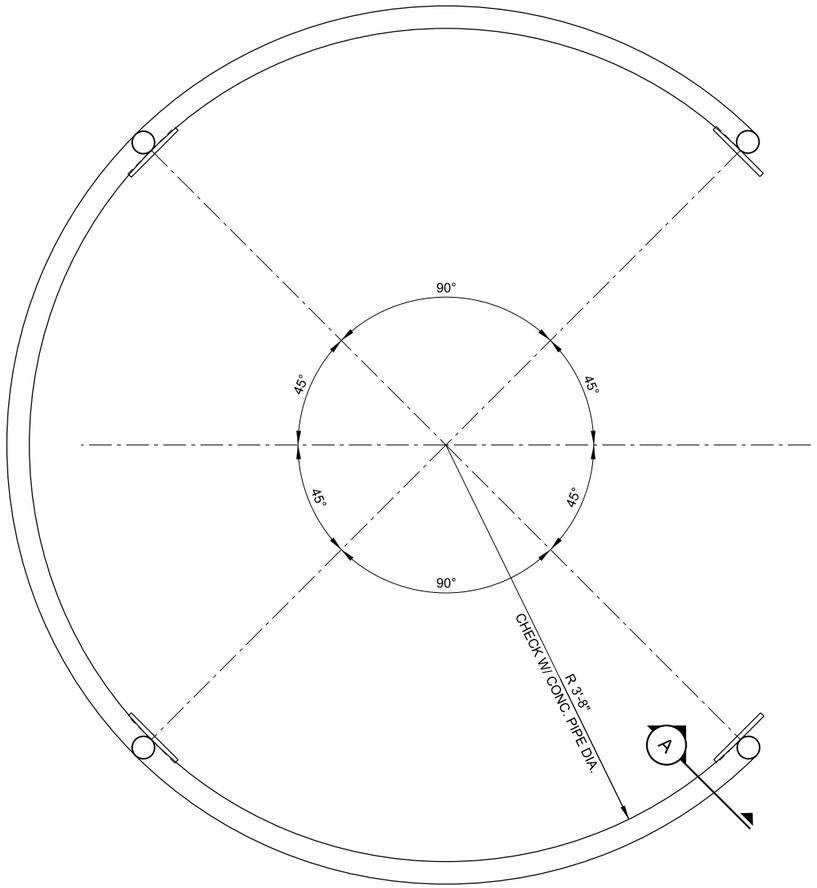

GALVANIZED AFTER FABRICATION 1 REQ'D/ STRUCTURE

A1 PLAN HANDRAIL

SCALE : 1 1/2"=1'-0" 0 6" 1' 2'

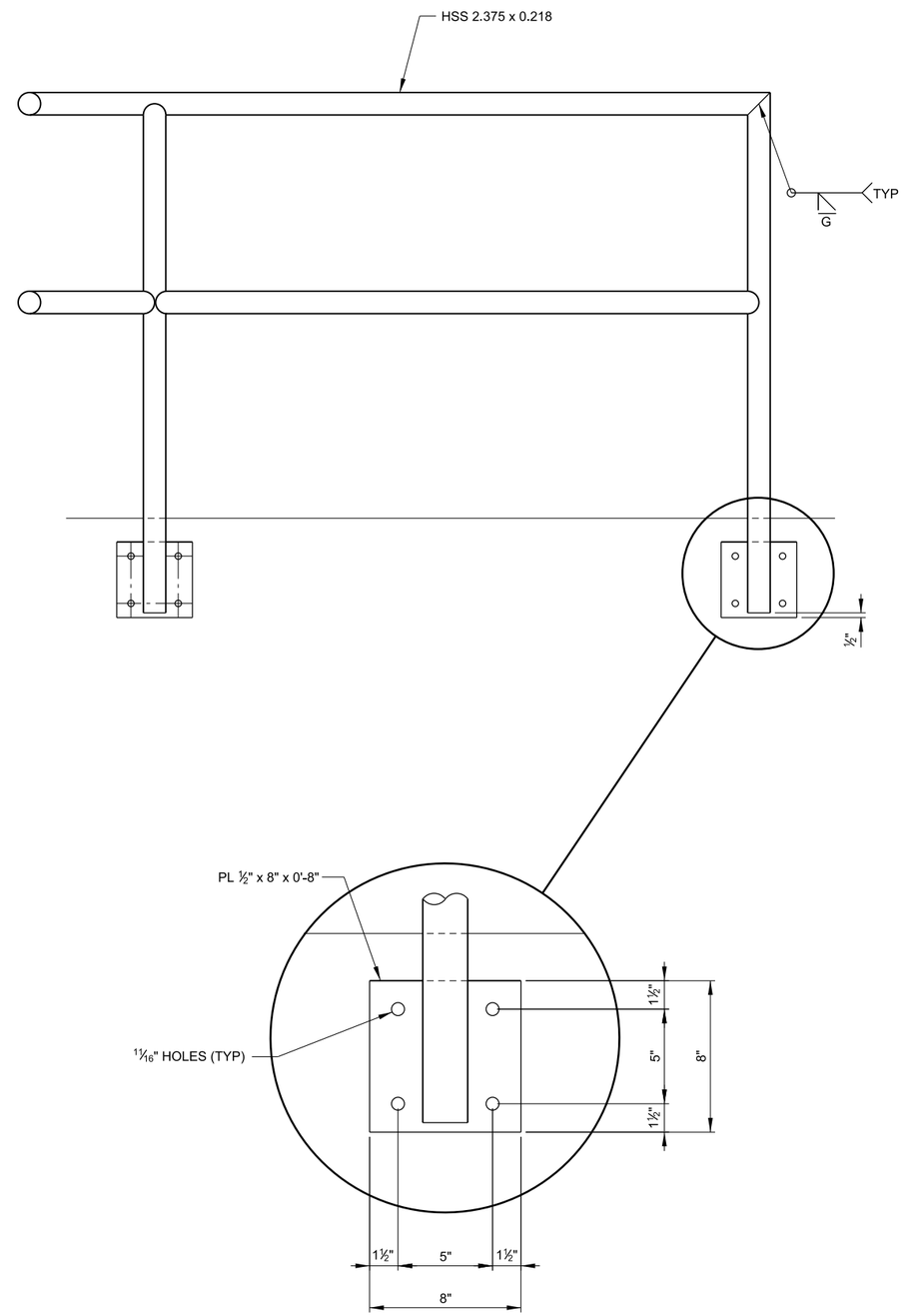

SEE SPECIFICATIONS FOR RAILING REQUIREMENTS

D1 ELEVATION HANDRAIL

SCALE : NO SCALE

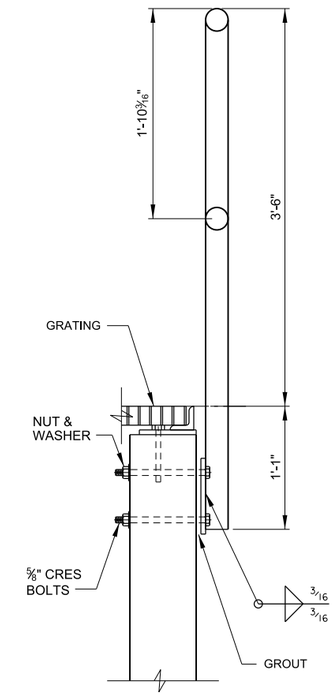

G3 (A) SECTION

SCALE : 1 1/2"=1'-0" 0 6" 1' 2'

US Army Corps of Engineers ®
Rock Island District

Symbol	Description	Date	Approved
	AS-BUILT AS OF MARCH 31 2015		

Revisions

Designed By: CHJ	Date: 2010/07/14		
Drawn By: DGP	Scale: AS SHOWN		
Checked By: BTJ	Project Code: EP98		
Reviewed By: FRJ	Solicitation Number: W912EK-10-B-0025		

U.S. ARMY ENGINEER DISTRICT
CORPS OF ENGINEERS
ROCK ISLAND, ILLINOIS

MISSISSIPPI RIVER
POOL 20 MILE 353.6
ALEXANDRIA, MO
FOX ISLAND HREP O & M MANUAL

36" RCP
STRUCTURE
DETAILS III

Sheet Reference Number:
PLATE 37

B56CDJMF
1/11/2016
PLATE 37.dgn

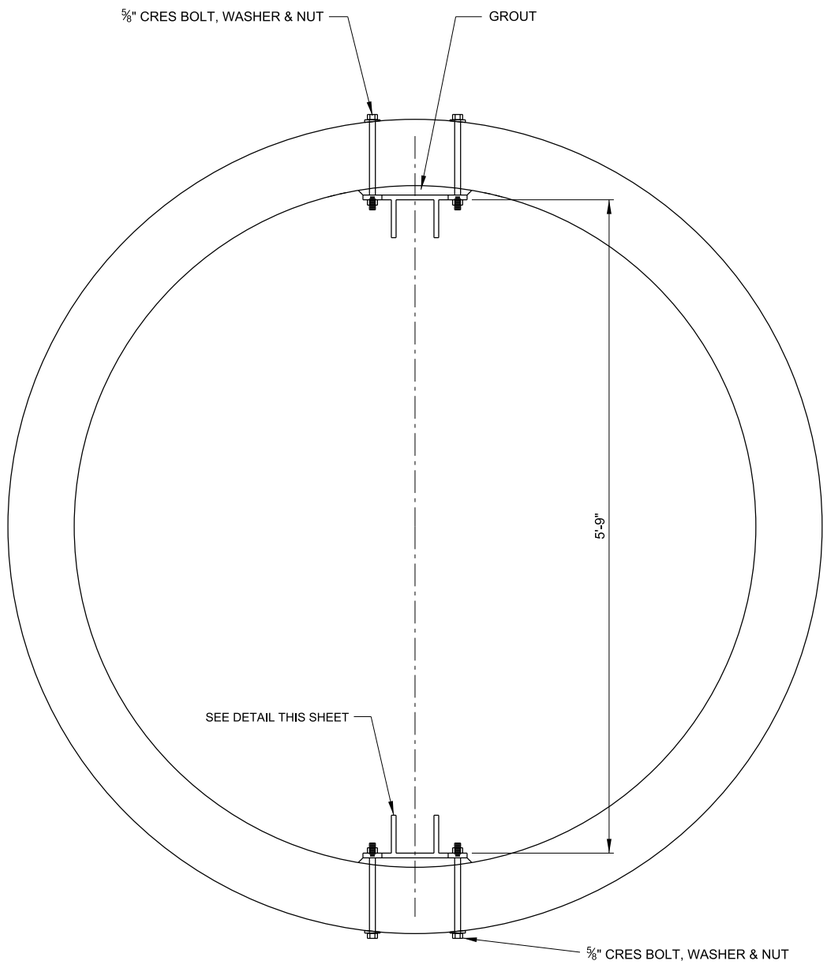

A1 STOP LOG DETAIL

SCALE : 1 1/2"=1'-0" 0 6" 1' 2'

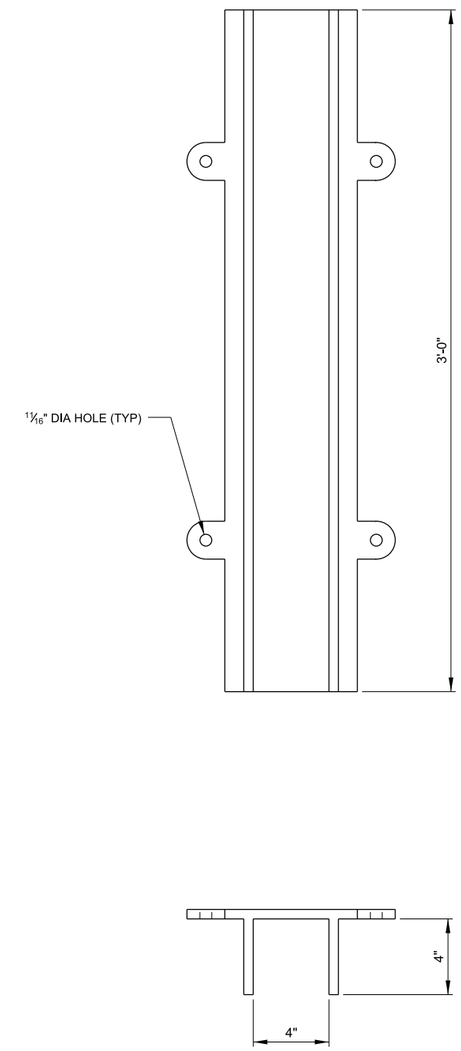

F1 STOP LOG FRAME

SCALE : 3"=1'-0" 0 3" 6" 9" 12"

US Army Corps of Engineers ®
Rock Island District

Symbol	Description	Date	Approved
	AS-BUILT AS OF MARCH 31 2015		

Revisions

Designed By: CHJ	Date: 2010/07/14		
Drawn By: DGP	Scale: AS SHOWN		
Checked By: BTJ	Project Code: EP98		
Reviewed By: FRJ	Solicitation Number: W912EK-10-B-0025		

U.S. ARMY ENGINEER DISTRICT
CORPS OF ENGINEERS
ROCK ISLAND, ILLINOIS

MISSISSIPPI RIVER
POOL REPAIRS 5.1 TO 353.6
ALEXANDRIA, MO
FOX ISLAND HREP O & M MANUAL

36" RCP
STRUCTURE
DETAILS IV

Sheet Reference Number:
PLATE 38

B5ECDJMF
1/11/2016
PLATE 38.dgn

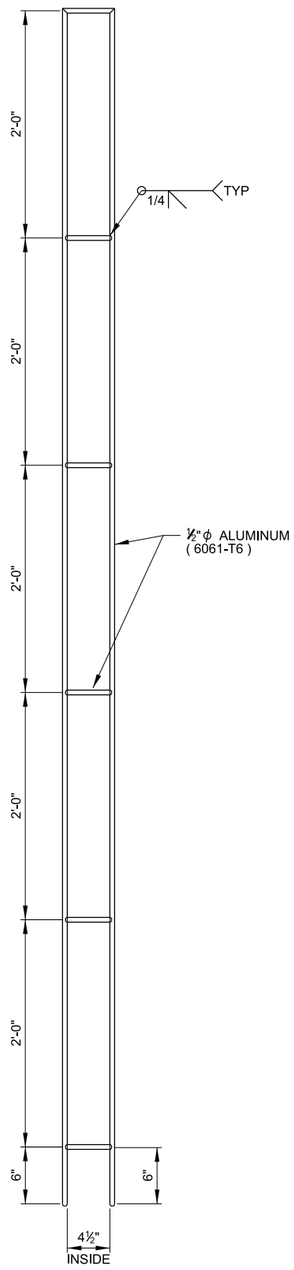

ELEVATION

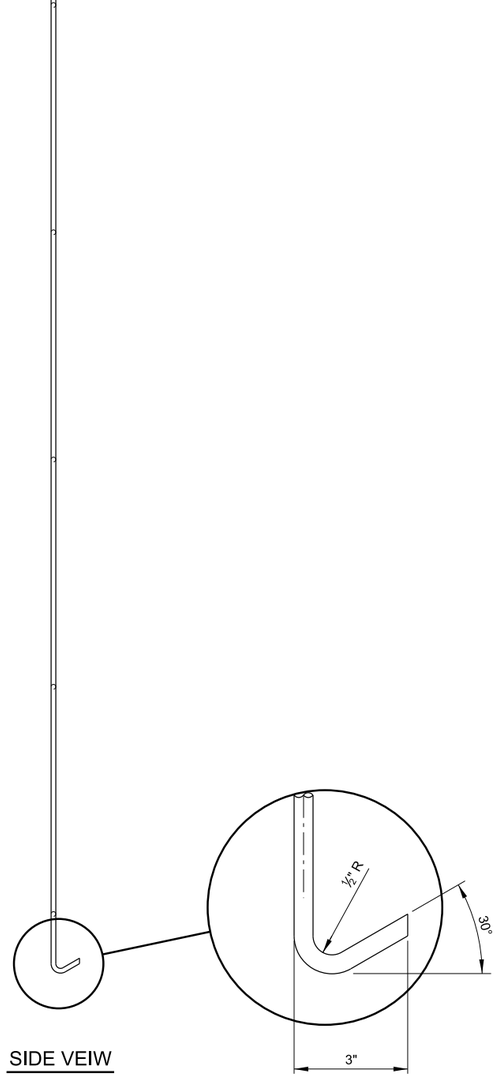

SIDE VEIW

(4 REQ'D)

A1 LIFT DEVICE

SCALE : 1 1/2"=1'-0"

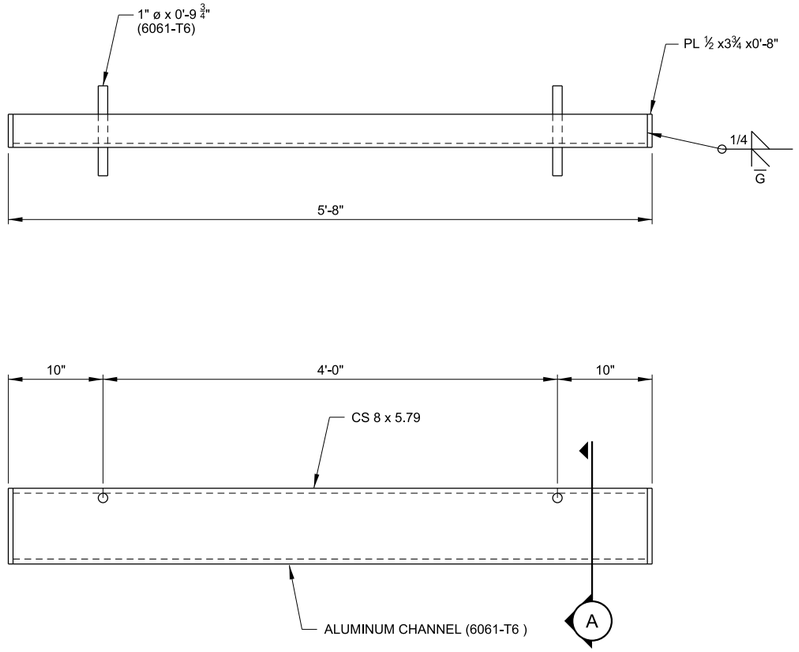

STRUCTURE	NUMBER OF STOP LOGS
5'x5' BOX CULVERT	13
36" DIA. PIPE	8 EACH LOCATION - 40 TOTAL

E3 STOP LOG

SCALE : 1 1/2"=1'-0"

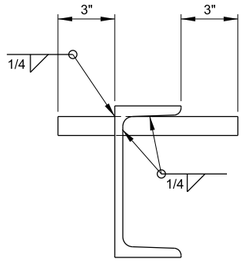

E1 (A) SECTION

SCALE : 1 1/2"=1'-0"

US Army Corps of Engineers ®
Rock Island District

Symbol	Description	Date	Approved
	AS-BUILT AS OF MARCH 31 2015		

Revisions

Designed By: CHJ
Date: 2010/07/14
Drawn By: DGP
Scale: AS SHOWN
Checked By: BTJ
Project Code: EP98
Reviewed By: FRJ
Solicitation Number: W912EK-10-B-0025

U.S. ARMY ENGINEER DISTRICT
CORPS OF ENGINEERS
ROCK ISLAND, ILLINOIS

MISSISSIPPI RIVER
POOL 25 MILE 273.0 TO 353.6
ALEXANDRIA, MO.
FOX ISLAND HREP O & M MANUAL

STOPLOG & LIFTING DEVICE

Sheet Reference Number:
PLATE 39

B5ECDJMF
1/11/2016
PLATE 39.dgn

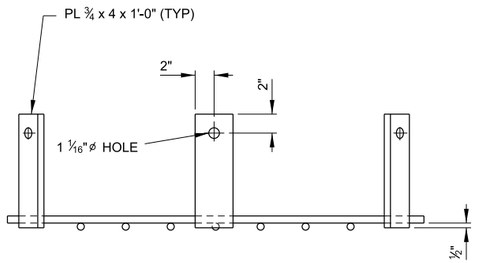

A4 PLAN
SCALE : 1 1/2"=1'-0"

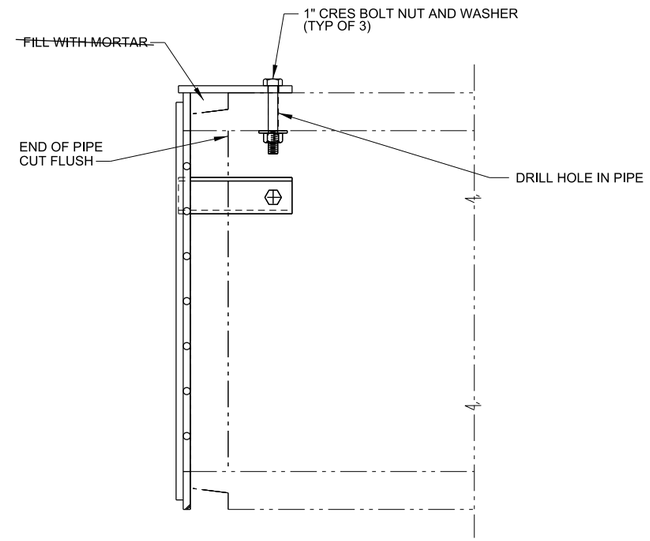

D4 (A) SIDE ELEVATION ASSEMBLY
SCALE : 1 1/2"=1'-0"

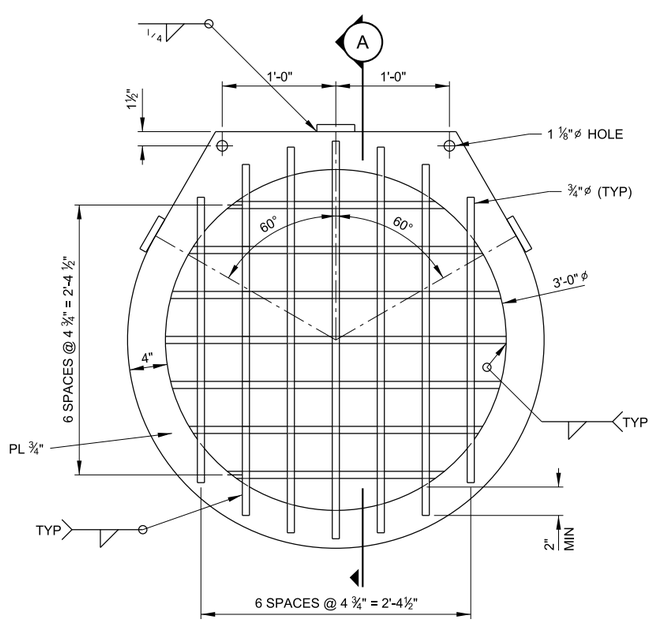

ASTM A36 STEEL - GALVANIZE AFTER FABRICATION

6 (~~8~~ REQ'D) ADDED ADDITIONAL GRATE / TRASH RACK TO STOPLOG "A"

A1 ELEVATION
SCALE : 1 1/2"=1'-0"

US Army Corps of Engineers ®
Rock Island District

Symbol	Description	Date	Approved
	AS-BUILT AS OF MARCH 31 2015		

Revisions

Designed By: CHJ	Date: 2010/07/14		
Drawn By: DGP	Scale: AS SHOWN		
Checked By: BTJ	Project Code: EP98		
Reviewed By: FRJ	Solicitation Number: W912EK-10-B-0025		

U.S. ARMY ENGINEER DISTRICT
CORPS OF ENGINEERS
ROCK ISLAND, ILLINOIS

MISSISSIPPI RIVER
POOL 20 MILE 343.3 TO 353.6
ALEXANDRIA, MO
FOX ISLAND HREP O & M MANUAL

36" DIA
TRASH RACK

Sheet Reference Number:
PLATE 40

B5ECDJMF
1/11/2016
PLATE 40.dgn

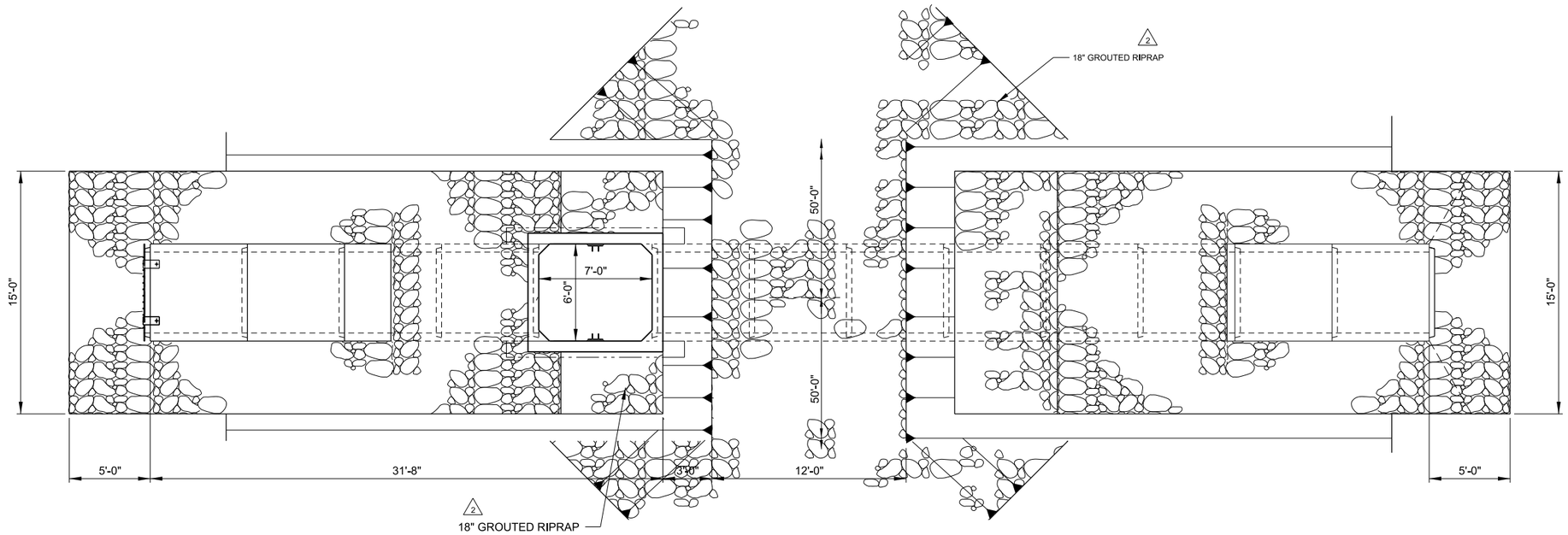

A4 PLAN (STOPLOG STRUCTURE C)

SCALE : 1"=4'-0"

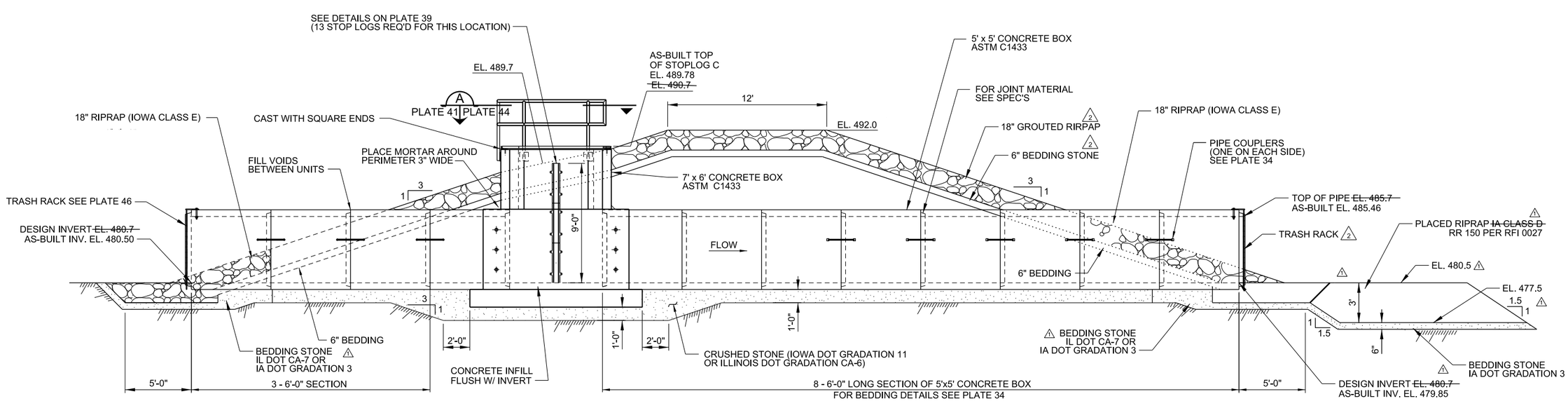

NOTE: ALL REPLACED RIPRAP IS RR150 PER RFI 0027

A1 ELEVATION (STOPLOG STRUCTURE C)

SCALE : 1"=4'-0"

US Army Corps of Engineers
Rock Island District

Symbol	Description	Date	Approved
2	AS-BUILT AS OF MARCH 31 2015	10 OCT 13	ELS
1	MOD EA025 - ADDED RIPRAP AND NOTES MOD EA014 - ADDED NOTES AND EXTEND RIPRAP	25 JUL 12	ELS

Revisions

Designed By: CHJ
Date: 2010/07/14
Drawn By: DGP
Scale: AS SHOWN
Checked By: BTJ
Project Code: EP98
Reviewed By: FRJ
Solicitation Number: W912EK-10-B-0025

U.S. ARMY ENGINEER DISTRICT
CORPS OF ENGINEERS
ROCK ISLAND, ILLINOIS

MISSISSIPPI RIVER
MILE 343.5 TO 363.6
POOL 13 PER 1913
ALEXANDRIA, MO
FOX ISLAND HREP O & M MANUAL

5 FOOT STANDARD CONCRETE BOX

Sheet Reference Number:
PLATE 41

B5ECD.MF
1/11/2016
PLATE 41.dgn

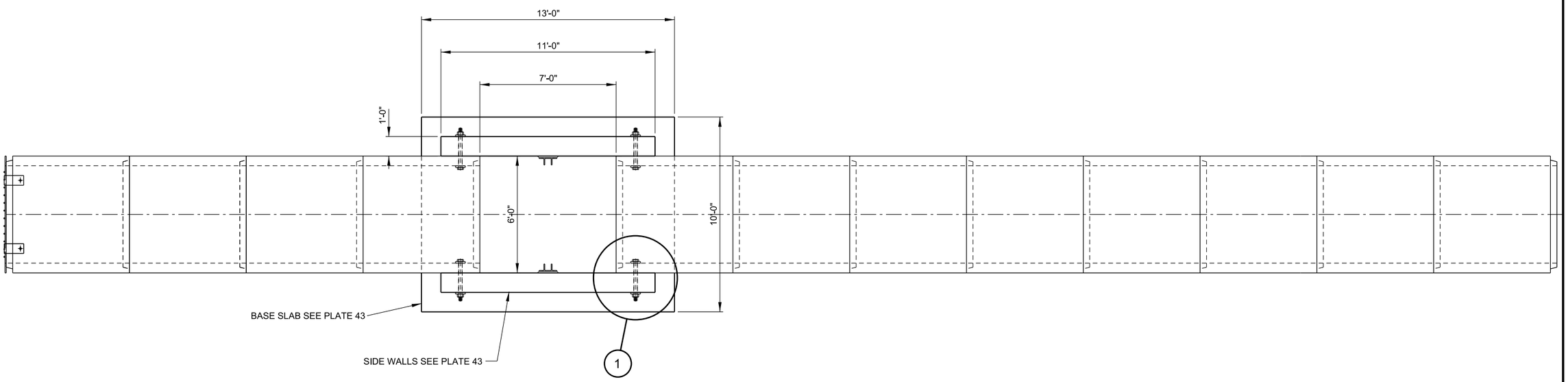

A4 PLAN
SCALE : 3/8"=1'-0"

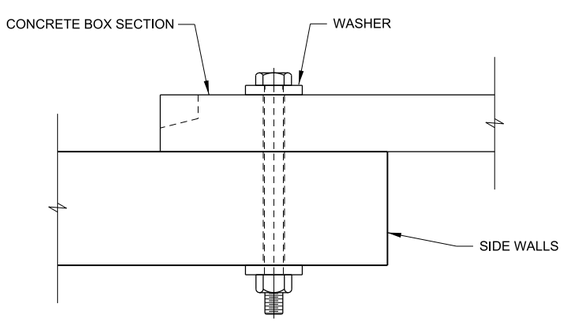

A1 (1) DETAIL
SCALE : 1 1/2"=1'-0"

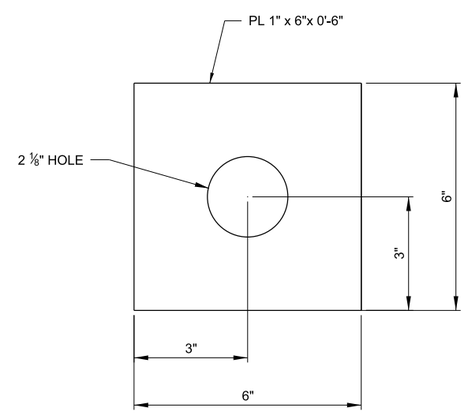

AISI 304 CORROSION RESISTANT STEEL 24 REQ'D

D1 WASHER
SCALE : 6"=1'-0"

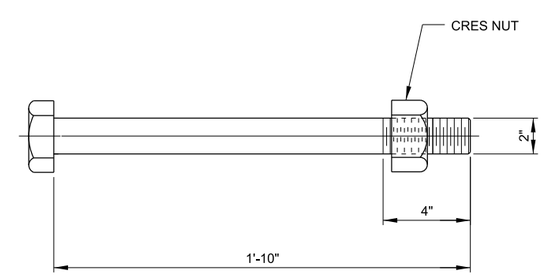

AISI 304 CORROSION RESISTANT STEEL 12 REQ'D

F1 BOLT
SCALE : 3"=1'-0"

US Army Corps of Engineers ®
Rock Island District

Symbol	Description	Date	Approved
	AS-BUILT AS OF MARCH 31 2015		

Revisions

Designed By:	CHJ	Date:	2010/07/14
Drawn By:	DGP	Scale:	AS SHOWN
Checked By:	BTJ	Project Code:	EP98
Reviewed By:	FRJ	Solicitation Number:	W912EK-10-B-0025

U.S. ARMY ENGINEER DISTRICT
CORPS OF ENGINEERS
ROCK ISLAND, ILLINOIS

MISSISSIPPI RIVER
POOL 20 MILE 343.3 TO 353.6
ALEXANDRIA, MO
FOX ISLAND HREP O & M MANUAL

5 FOOT STANDARD CONCRETE BOX DETAILS I

Sheet Reference Number:
PLATE 42

B5ECD.MF
1/11/2016
PLATE 42.dgn

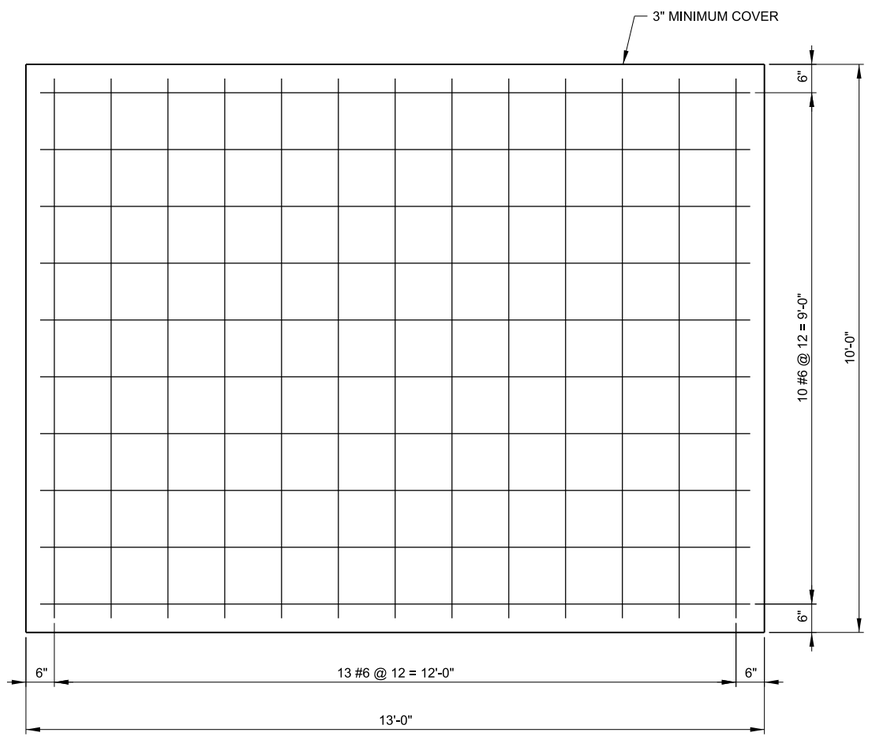

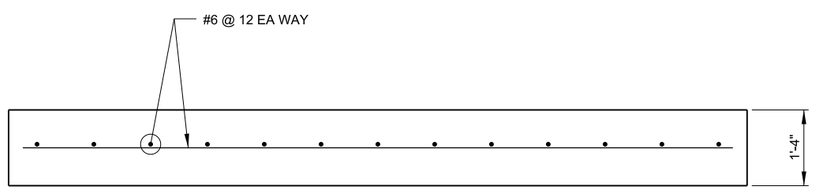

PRECAST OR CAST-IN PLACE (1 REQ'D)

A1 BASE SLAB REINFORCING

SCALE : 3/4"=1'-0"

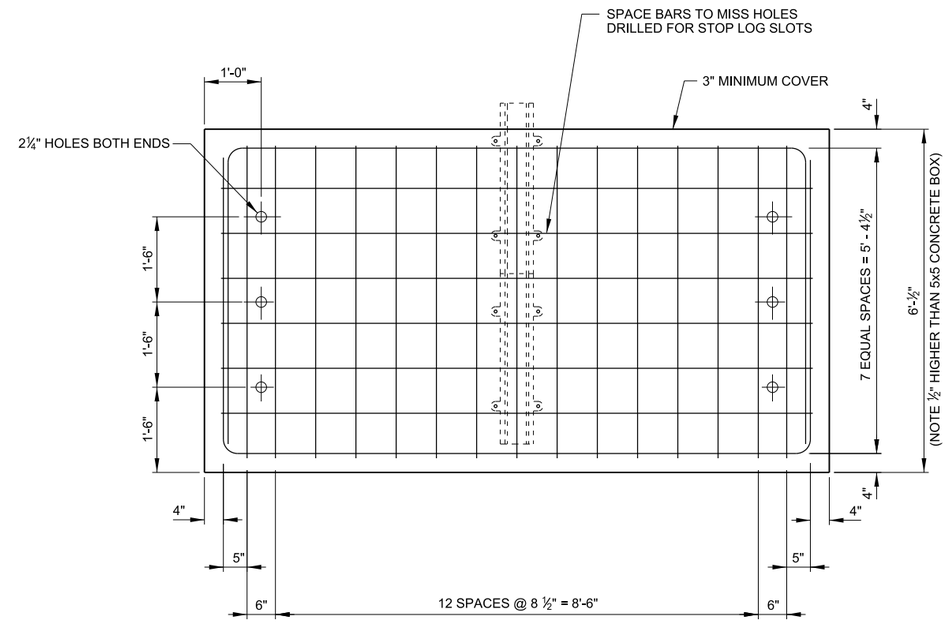

NOTE: ALL REINFORCING BARS ARE #6

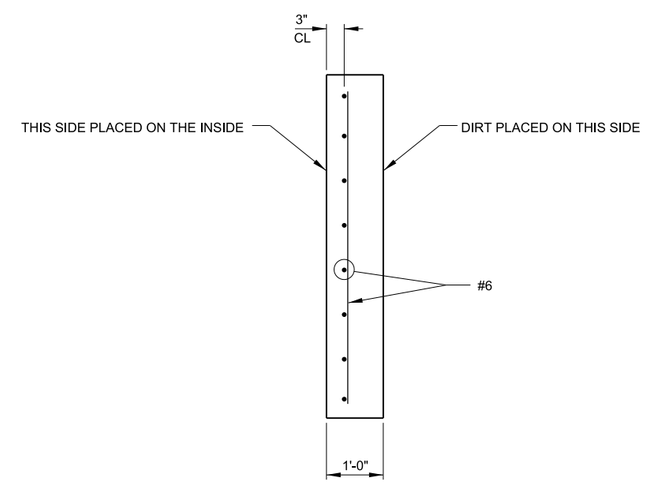

PRECAST OR CAST-IN PLACE (2 REQ'D)

E1 SIDE WALL REINFORCING

SCALE : 3/4"=1'-0"

US Army Corps of Engineers ®
Rock Island District

Symbol	Description	Date	Approved
	AS-BUILT AS OF MARCH 31 2015		
	Revisions		

Designed By: CHJ
Date: 2010/07/14
Drawn By: DGP
Scale: AS SHOWN
Checked By: BTJ
Project Code: EP98
Reviewed By: FRJ
Solicitation Number: W912EK-10-B-0025

U.S. ARMY ENGINEER DISTRICT
CORPS OF ENGINEERS
ROCK ISLAND, ILLINOIS

MISSISSIPPI RIVER
POOL 20 NAVIGATION
ALEXANDRIA, MO
FOX ISLAND HREP O & M MANUAL

5 FOOT STANDARD CONCRETE BOX DETAILS II

Sheet Reference Number:
PLATE 43

B5ECD.MF
1/11/2016
PLATE-43.dgn

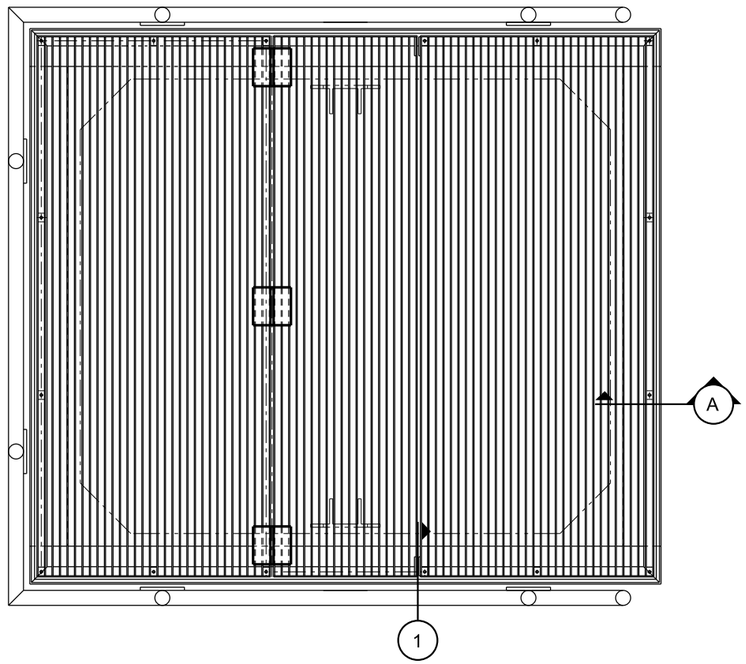

A3 (A) SECTION
SCALE : 1"=1'-0"

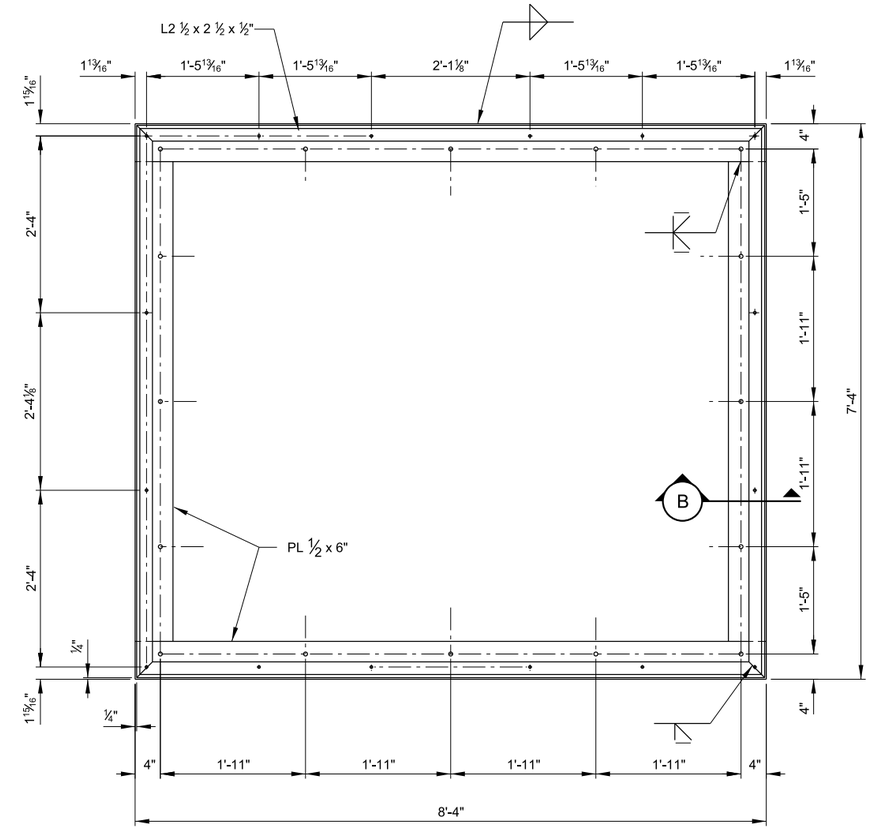

ASTM A36 STEEL - GALVANIZE AFTER FABRICATION (1 REQ'D)

E3 GRATING FRAME
SCALE : 1"=1'-0"

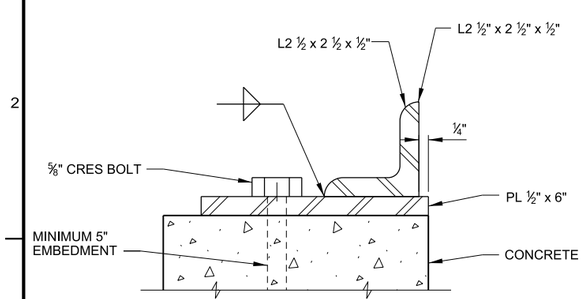

A1 (B) SECTION
SCALE : 6"=1'-0"

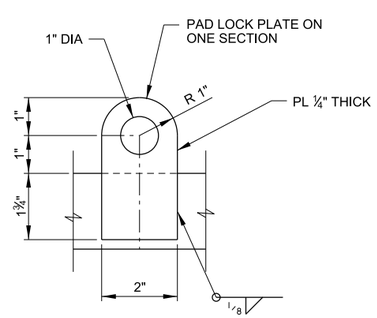

4 REQ'D PER LOCATION

C1 (1) LATCH DETAIL
SCALE : 6"=1'-0"

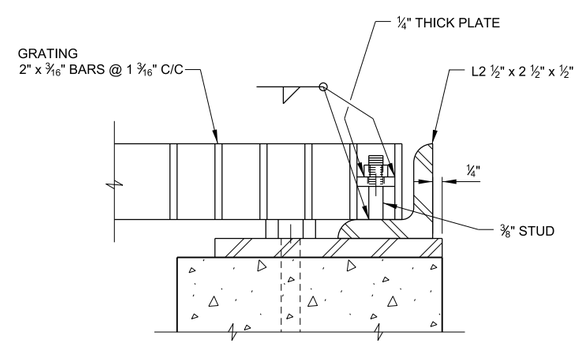

E1 (A) SECTION
SCALE : 6"=1'-0"

US Army Corps of Engineers ®
Rock Island District

Symbol	Description	Date	Approved
	AS-BUILT AS OF MARCH 31 2015		

Revisions

Designed By: CHJ	Date: 2010/07/14		
Drawn By: DGP	Scale: AS SHOWN		
Checked By: BTJ	Project Code: EP98		
Reviewed By: FRJ	Solicitation Number: W912EK-10-B-0025		

U.S. ARMY ENGINEER DISTRICT
CORPS OF ENGINEERS
ROCK ISLAND, ILLINOIS

MISSISSIPPI RIVER
POOL 20 MILE 343.5 TO 353.6
ALEXANDRIA, MO
FOX ISLAND HREP O & M MANUAL

5 FOOT STANDARD CONCRETE BOX DETAILS III

Sheet Reference Number:
PLATE 44

B5ECD.MF
1/11/2016
PLATE 44.dgn

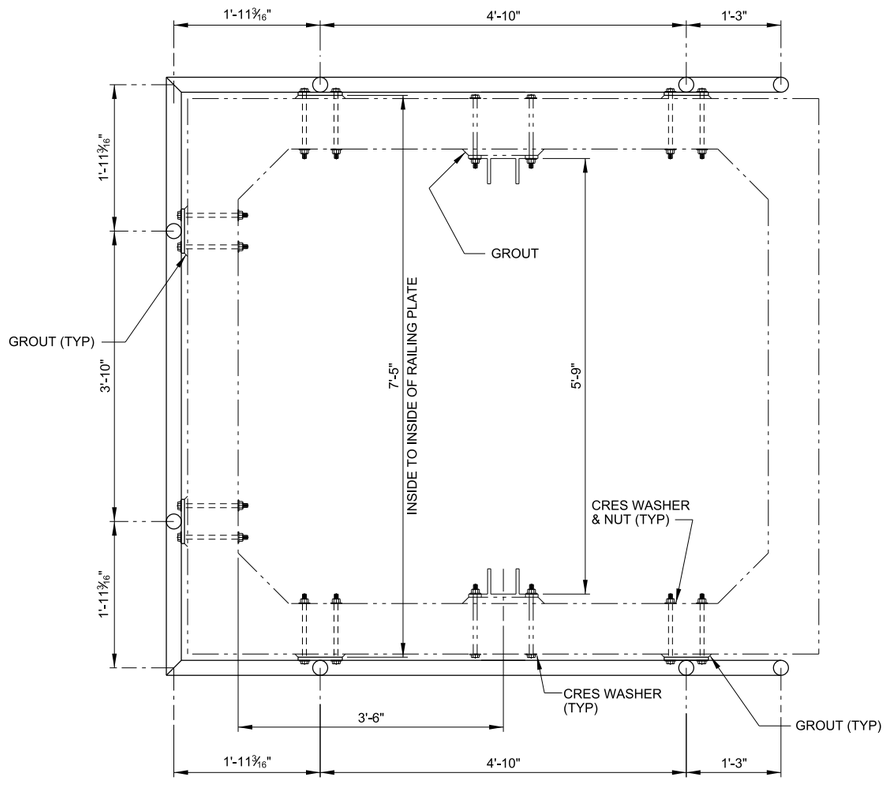

NOTE:
ALL BOLTS SHALL BE 5/8" DIA., AISI 304 CORROSION RESISTANT STEEL.

A1 BASE SLAB HANDRAIL

SCALE : 1"=1'-0"

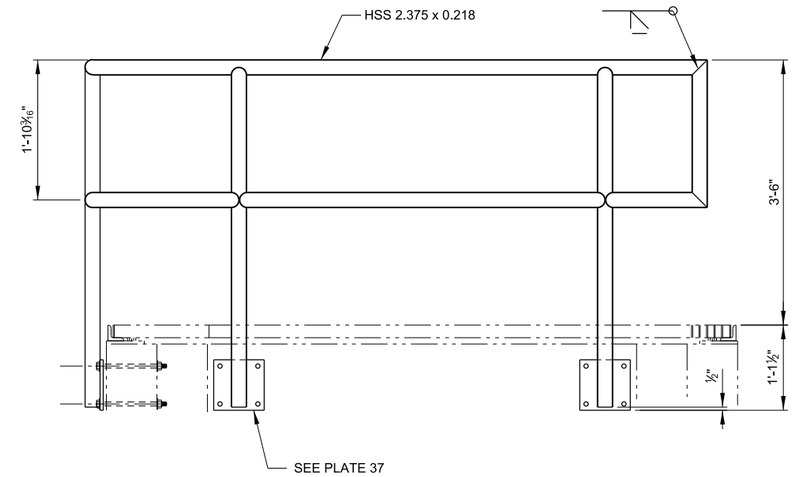

E5 ELEVATION HANDRAIL

SCALE : 1"=1'-0"

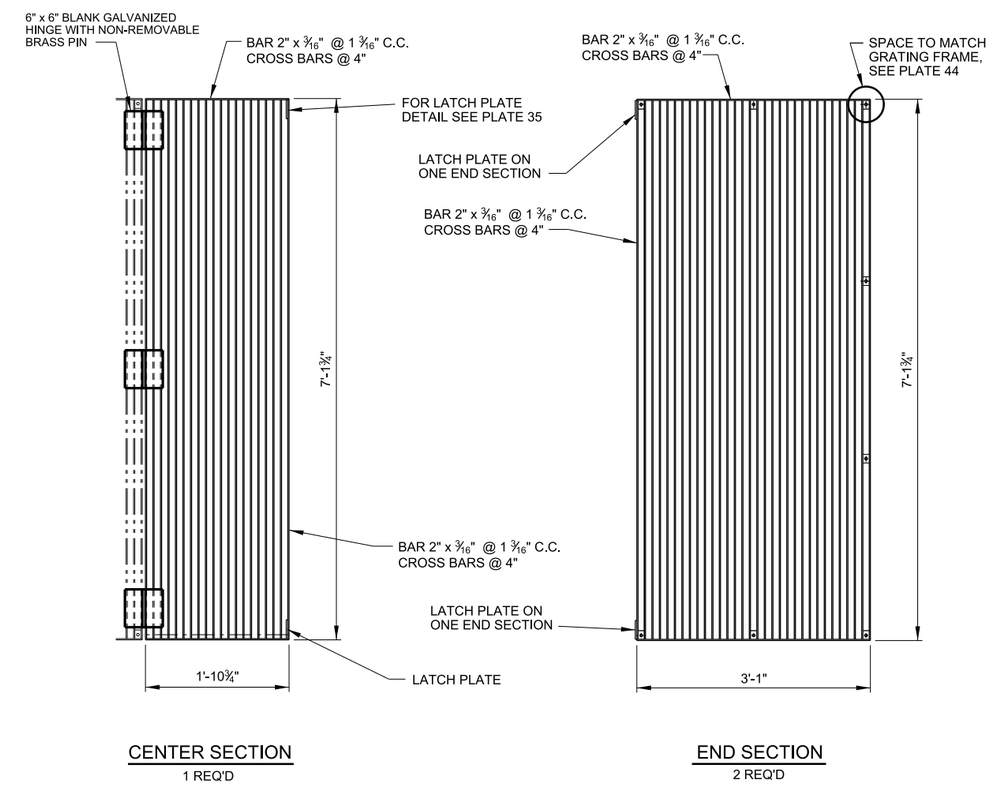

CENTER SECTION
1 REQ'D

END SECTION
2 REQ'D

E1 GRATING LAYOUT

SCALE : 1"=1'-0"

US Army Corps of Engineers ®
Rock Island District

Symbol	Description	Date	Approved
	AS-BUILT AS OF MARCH 31 2015		

Revisions

Designed By: CHJ	Date: 2010/07/14		
Drawn By: DGP	Scale: AS SHOWN		
Checked By: BTJ	Project Code: EP98		
Reviewed By: FRJ	Solicitation Number: W912EK-10-B-0025		

U.S. ARMY ENGINEER DISTRICT
CORPS OF ENGINEERS
ROCK ISLAND, ILLINOIS

MISSISSIPPI RIVER
POOL REPAIRS 53.0-353.6
ALEXANDRIA, MO
FOX ISLAND HREP O & M MANUAL

5 FOOT STANDARD
CONCRETE BOX
DETAILS IV

Sheet
Reference
Number:
PLATE 45

BSECDJMF
1/11/2016
PLATE 45.dgn

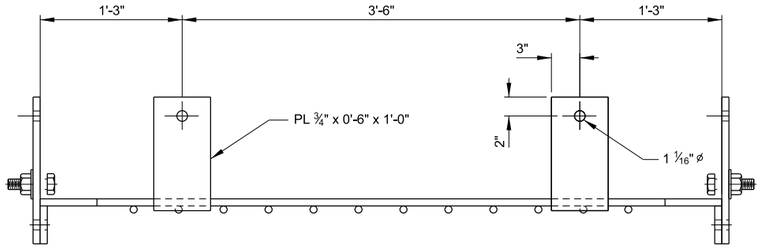

A5 PLAN

SCALE : 1 1/2"=1'-0"

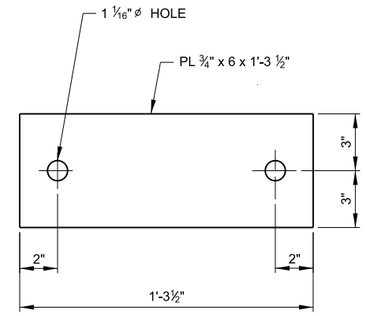

ASTM A36 STEEL - GALVANIZE AFTER FABRICATION (2 REQ'D)

E5 PL $\frac{3}{4}$" x 6 x 1'-3 $\frac{1}{2}$"

SCALE : 3"=1'-0"

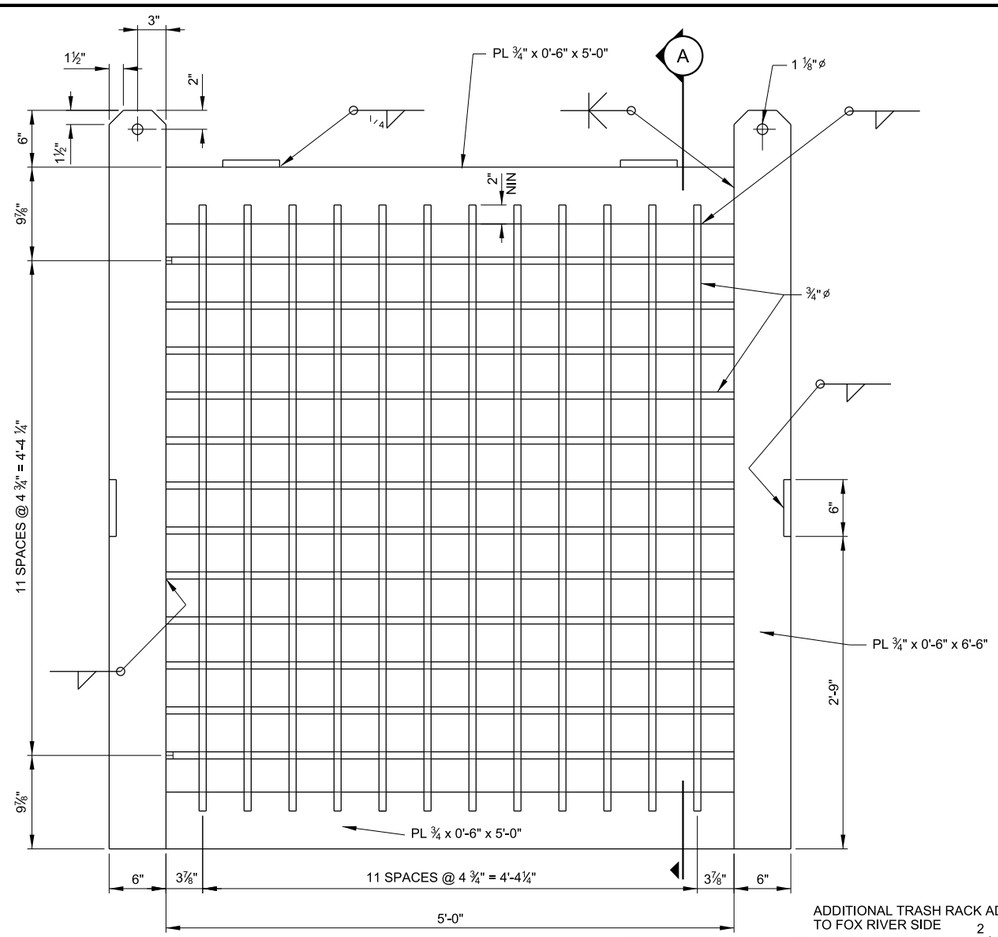

ADDITIONAL TRASH RACK ADDED TO FOX RIVER SIDE

ASTM A36 STEEL - GALVANIZE AFTER FABRICATION ~~(1~~ 2 REQ'D)

A1 ELEVATION

SCALE : 1 1/2"=1'-0"

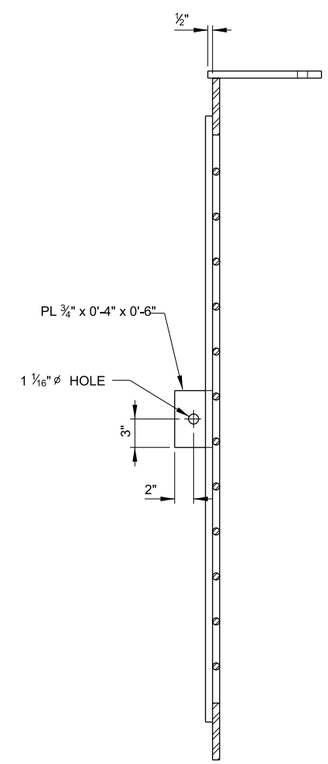

E1 (A) SECTION

SCALE : 1 1/2"=1'-0"

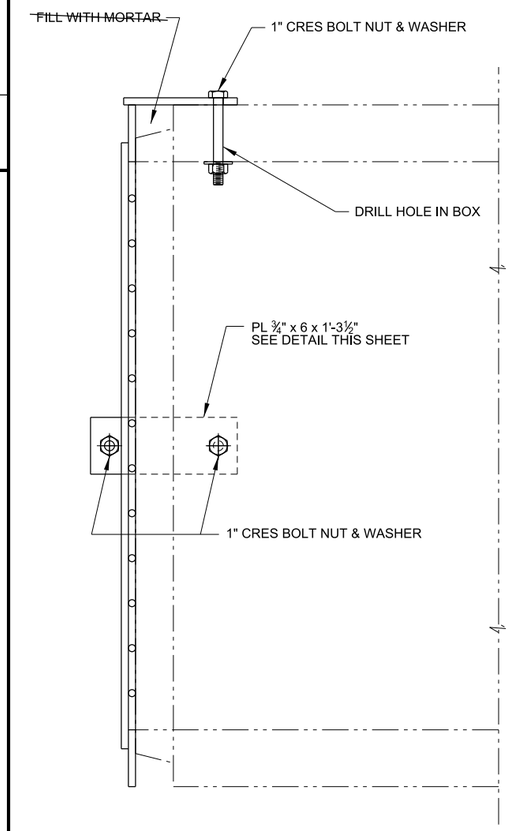

G1 SIDE ELEVATION ASSEMBLY

SCALE : 1 1/2"=1'-0"

US Army Corps of Engineers ®
Rock Island District

Symbol	Description	Date	Approved
	AS-BUILT AS OF MARCH 31 2015		

Revisions

Designed By: CHJ	Date: 2010/07/14		
Drawn By: DGP	Scale: AS SHOWN		
Checked By: BTJ	Project Code: EP98		
Reviewed By: FRJ	Solicitation Number: W912EK-10-B-0025		

U.S. ARMY ENGINEER DISTRICT
CORPS OF ENGINEERS
ROCK ISLAND, ILLINOIS

MISSISSIPPI RIVER
POOL NO. 19 MILE 353.6
ALEXANDRIA, MO
FOX ISLAND HREP O & M MANUAL

5' X 5'
TRASH RACK

Sheet Reference Number:
PLATE 46

B5ECDJMF
1/11/2016
PLATE 46.dgn

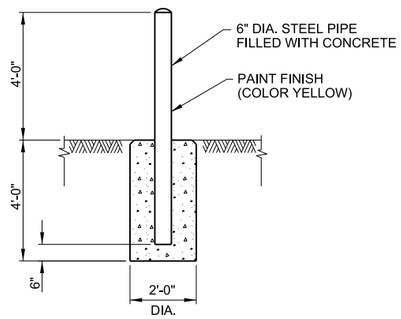

A5 PIPE BOLLARD DETAIL

SCALE : NO SCALE

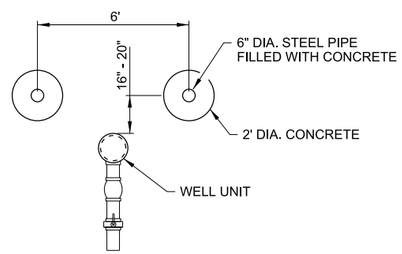

A4 PIPE BOLLARD PLAN

SCALE : NO SCALE

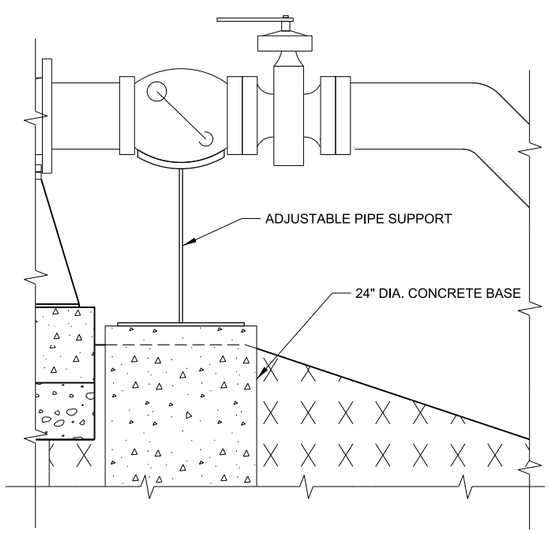

A1 PIPE SUPPORT ELEVATION

SCALE : 1"=1'-0"

0 1' 2'

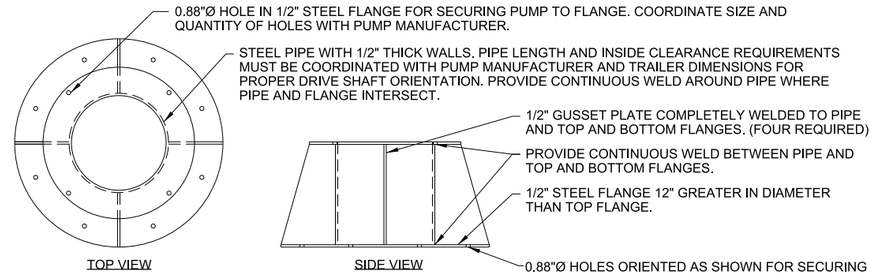

NOTE: ENTIRE PUMP SUPPORT STRUCTURE SHALL BE PAINTED WITH THREE COATS OF EXTERIOR PAINT.

C5 WELL HEAD STRUCTURAL SUPPORT DETAIL

SCALE : NO SCALE

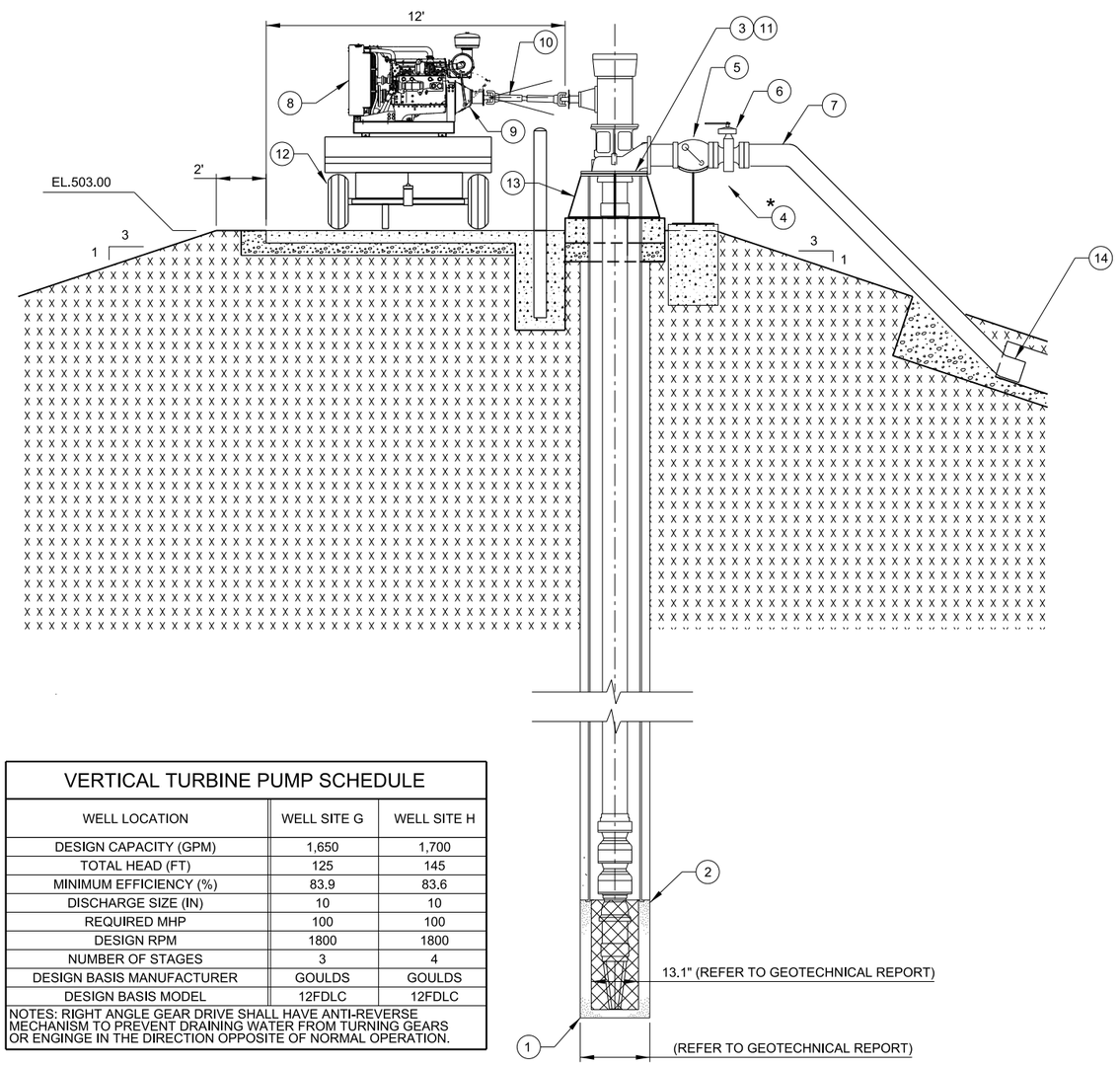

VERTICAL TURBINE PUMP SCHEDULE		
WELL LOCATION	WELL SITE G	WELL SITE H
DESIGN CAPACITY (GPM)	1,650	1,700
TOTAL HEAD (FT)	125	145
MINIMUM EFFICIENCY (%)	83.9	83.6
DISCHARGE SIZE (IN)	10	10
REQUIRED MHP	100	100
DESIGN RPM	1800	1800
NUMBER OF STAGES	3	4
DESIGN BASIS MANUFACTURER	GOULDS	GOULDS
DESIGN BASIS MODEL	12FDLC	12FDLC
NOTES: RIGHT ANGLE GEAR DRIVE SHALL HAVE ANTI-REVERSE MECHANISM TO PREVENT DRAINING WATER FROM TURNING GEARS OR ENGINGE IN THE DIRECTION OPPOSITE OF NORMAL OPERATION.		

C1 WELL PUMP ELEVATION WITH DIESEL ENGINE & TRAILER

SCALE : NO SCALE

KEY NOTES:

1. BOTTOM OF WELL ELEVATION: WELL SITE G I.E. = 390.0; WELL SITE H I.E. = 371.6
2. TOP OF SCREEN ELEVATION: WELL SITE G I.E. = 475.0; WELL SITE H I.E. = 477.6. REFER TO SPECIFICATIONS AND GEOTECHNICAL REPORT FOR EXACT ELEVATIONS AND SCREEN AND SLOT REQUIREMENTS.
3. ACTUAL TOP OF WELL ELEVATION MUST BE COORDINATED WITH PUMP, ENGINE AND TRAILER MANUFACTURER'S DIMENSIONS TO INSURE THE UNIVERSAL DRIVE SHAFT ASSEMBLY ANGLE BETWEEN ENGINE AND RIGHT ANGLE GEAR ASSEMBLY DOES NOT EXCEED 15°.
4. * ~~DISCHARGE PIPE SUPPORTS. PROVIDE 4"x1/2" STEEL PLATES FASTENED TO 4'x4' CONCRETE PAD WITH APPROPRIATELY SIZED ANCHORS. FASTEN 1/2" STEEL PLATES TO FLANGE CONNECTION ON EACH SIDE OF DISCHARGE PIPE. SUPPORTS SHALL MEET AT CENTER OF 4'x4' CONCRETE PAD AND FORM A "V" PATTERN BETWEEN FLANGE CONNECTIONS AND CONCRETE PAD ANCHORS. REFER TO DETAIL.~~ AS-BUILT DISCHARGE PIPE SUPPORT. CHANGED TO AN ADJUSTABLE PIPE SUPPORT MOUNTED TO A 24" DIA. CONCRETE BASE.
5. 12" SWING TYPE CHECK VALVE. SLOPE PIPE TO DRAIN BACK INTO WELL.
6. 12" BUTTERFLY VALVE WITH LOCKABLE POSITION USED TO BALANCE PUMP HEAD LOSS (REFER TO NOTE 3). VALVE SHALL HAVE REMOVABLE HANDLE.
7. 12" DUCTILE IRON PIPE ROUTED TO 18" CORRUGATED METAL PIPE AS SHOWN.
8. FURNISH AND INSTALL (1) NEW DIESEL ENGINE PER TRAILER. SEE SPECIFICATIONS FOR REQUIREMENTS OF THE DIESEL ENGINES. INSTALL EACH ENGINE ON ITS RESPECTIVE TRAILER IN ACCORDANCE WITH THE MANUFACTURER'S INSTRUCTIONS.
9. FURNISH AND INSTALL NEW PERMANENTLY MOUNTED MECHANICAL, MANUALLY ENGAGED POWER TAKE-OFF (PTO) FOR ENGAGEMENT/DISENGAGEMENT OF THE ENGINE DRIVEN COMPONENTS. THE CONTRACTOR SHALL BE RESPONSIBLE TO PROVIDE THE CLUTCHES WITH ADVANCED BEARING ARRANGEMENT FOR CONTINUOUS OPERATION RATING SIZED FOR THE PUMP HORSEPOWER REQUIREMENTS. THE CLUTCHES SHALL HAVE A SAE HOUSING, FLYWHEEL/DRIVE RING ARRANGEMENT TO MATCH THE NEW ENGINES. DESIGN BASIS: TWIN DISC.
10. THE CONTRACTOR SHALL FURNISH AND INSTALL NEW TELESCOPING UNIVERSAL JOINT DRIVE SHAFT ASSEMBLIES TO COUPLE TO THE PUMP'S RIGHT ANGLE GEAR INPUT SHAFTS AND THE NEW DIESEL ENGINE PTO OUTPUT SHAFTS. THE SHAFT SHALL ATTACH TO THE ENGINE VIA QUICK CONNECT SPLINTED COUPLING. THE RIGHT ANGLE GEAR SHALL HAVE A KEYED OR FLANGED FITTING. THE SHAFT SHALL BE REMOVED AND TRANSPORTED ON THE TRAILER AFTER EACH USE. THE LENGTH "X" FOR THE DRIVE SHAFT SHALL BE DETERMINED BY THE CONTRACTOR FOR THE NEW ENGINE INSTALLATIONS AND TO NOT EXCEED MAXIMUM ALLOWABLE ANGULAR ALIGNMENT AS DETERMINED BY THE DRIVE SHAFT MANUFACTURER. PROVIDE SAFETY SHIELD FOR DRIVE SHAFT AS DESCRIBED IN THE SPECIFICATIONS. U-JOINTS AND SHAFT SHALL BE RATED FOR 125% OF RATED HORSE POWER. AS-BUILT HINGED SHAFT SAFETY COVERS ADDED TO BOTH UNITS.
11. PROVIDE FLANGE AT TOP OF WELL FOR SECURING PUMP DISCHARGE HOUSING AND RIGHT ANGLE GEAR DRIVE. COORDINATE PUMP MOUNTING REQUIREMENTS WITH PUMP MANUFACTURER TO ENSURE PROPER FLANGE DIAMETER AND WEIGHT BEARING CAPACITY.
12. TWO INDIVIDUAL TRAILERS SHALL BE PROVIDED, ONE FOR EACH WELL SITE. EACH TRAILER SHALL BE EQUIPPED WITH THE APPROPRIATELY SIZED DIESEL ENGINE WITH PERMANENTLY ATTACHED PTO CLUTCH, FUEL TANK, 60 GALLON WATER TANK WITH HOSE (FOR PUMP START UP LUBRICATION), INTEGRAL JACKS, FULL SIZE SPARE TIRE AND UNIVERSAL DRIVE SHAFT WITH SECURE STORAGE BRACKETS.
13. PROVIDE FLANGE AROUND TOP OF WELL CASING FOR MOUNTING PUMP. FLANGE SHALL BE SECURED TO AROUND ENTIRE PERIMETER OF CASING AS WELL AS STRUCTURALLY SUPPORTED FROM THE CONCRETE PAD. REFER TO THE DETAIL ON THIS SHEET.
14. EXTEND 12" DUCTILE IRON PIPE 12" MINIMUM INTO CMP. MATCH SLOPE AND FLOW LINE ELEVATION OF TWO PIPES. 12" DUCTILE IRON PIPE SHALL REST ON BOTTOM OF 18" CMP FOR FULL 12" AT SAME SLOPE.

NOTES:

1. SCREEN LENGTH SHALL BE DETERMINED BY CONTRACTOR, SEE SPECS.
2. PROVIDE DRAIN HOLES ON RISER AS NECESSARY TO PREVENT STANDING WATER IN PIPE.
3. PROVIDE METAL TAG ON GATE VALVE TO READ, "DO NOT ADJUST VALVE. PUMP DAMAGE MAY RESULT".
4. SEE SPECIFICATION SECTION 33 20 03 (NEW WATER WELLS AND EXISTING WELL ABANDONMENT) FOR WELL BORING LOGS.

US Army Corps of Engineers ®
Rock Island District

Symbol	Description	Date	Approved
	AS-BUILT AS OF MARCH 31, 2015		

Revisions

Date: 2010/07/14
Scale: AS SHOWN
Project Code: EP98
Solicitation Number: W912EK-10-B-0025

Designed By: MTS
Drawn By: DD
Checked By: JTB
Reviewed By: JWB

U.S. ARMY ENGINEER DISTRICT
CORPS OF ENGINEERS
ROCK ISLAND, ILLINOIS

MISSISSIPPI RIVER
POOL 20 RM 356.5 TO 353.6
ALEXANDRIA, MO
FOX ISLAND HREP O & M MANUAL

MECHANICAL ELEVATION

Sheet Reference Number:
PLATE 47

B5ECD.MF
1/11/2016
PLATE47.dgn