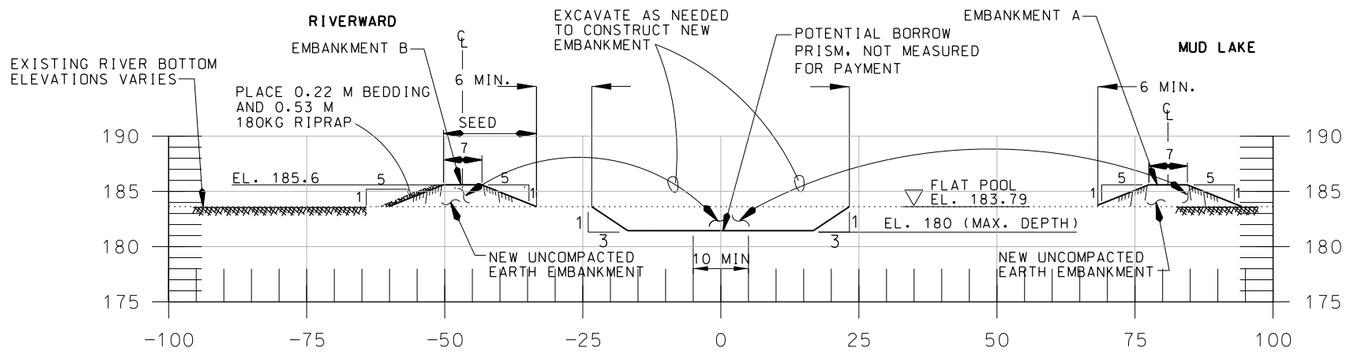

A C4|C11 TYPICAL SECTION - EMBANKMENT AND BORROW SOURCE

NO SCALE

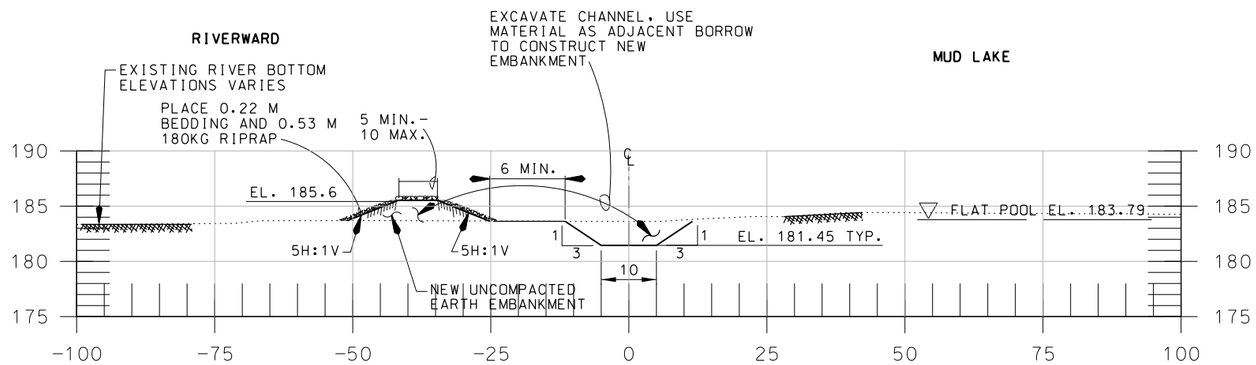

B C5|C11 TYPICAL SECTION - RIPRAP EMBANKMENT WITH EXCAVATED CHANNEL

STA 13+86A TO STA 14+09A
STA 14+53A TO STA 14+76A

NO SCALE

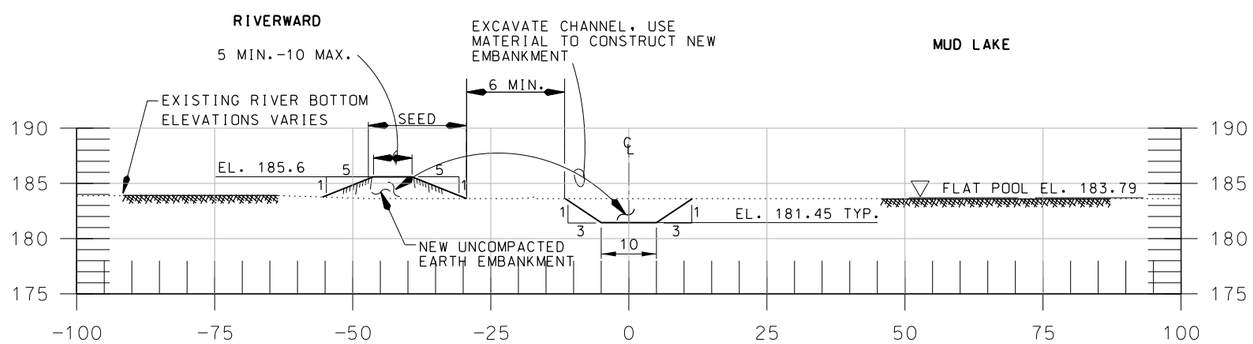

C C4.C5|C11 TYPICAL SECTION - EMBANKMENT WITH EXCAVATED CHANNEL

STA 2+86A TO STA 11+65A
STA 12+05A TO STA 13+86A
STA 16+10A TO STA 19+10A

NO SCALE

NOTES:

1. ALL SLOPES ON EMBANKMENTS SHALL BE 5 (MIN.) :1.
2. SEEDING SHALL EXTEND TO BOUNDARY OF RIPRAP OR NORMAL WATERLINE.
3. ABOVE ELEVATION 183.79 M, 0.53 M RIPRAP SHALL BE PLACED ON 0.22 M BEDDING STONE.
4. BELOW ELEVATION 183.79 M, 0.65 M RIPRAP SHALL BE PLACED ON 0.35 M BEDDING STONE.

ALL DISTANCES, MEASUREMENTS AND ELEVATIONS SHOWN ARE IN METERS UNLESS NOTED OTHERWISE.

US Army Corps of Engineers
Rock Island District

Symbol	Description	Date	Approved
A	AS CONSTRUCTED	8-11-06	RTN/RAP

Revisions

Designed By: RSN
Drawn By: GDB
Checked By: WEM
Reviewed By: GAZ
Date: 21 SEP-2002
Scale: AS SHOWN
Drawing Code: EP66
Solicitation Number: DACW25-02-R-0008

U.S. ARMY ENGINEER DISTRICT
CORPS OF ENGINEERS
ROCK ISLAND, ILLINOIS

POOL 11 ISLANDS
HABITAT REHABILITATION
& ENHANCEMENT PROJECT
SUNFISH LAKE AND MUD LAKE

MUD LAKE
TYPICAL SECTIONS
A, B AND C

Sheet Reference Number:
PLATE 37

10:01:49 AM
c:\pw_work\ingemar\d0243039\d0AM_PLATE37.dgn

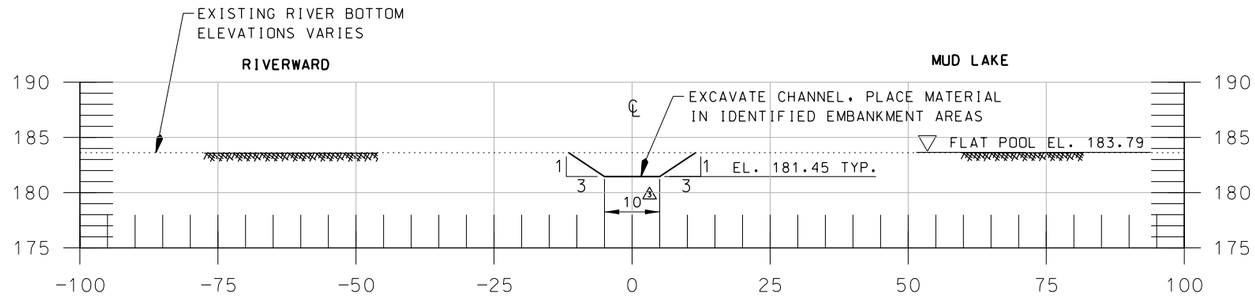

D
C8,C9,C10,C12

TYPICAL SECTION - EXCAVATED CHANNEL ALIGNMENTS E, F, G, H, I, J, K, AND L

NO SCALE

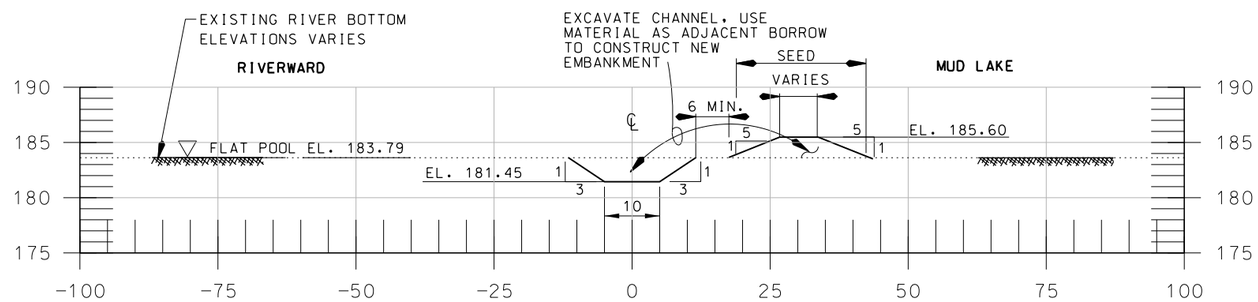

E
C10,C12

TYPICAL SECTION - EXCAVATED CHANNEL WITH SIDE CAST BERM - ALIGNMENT M

NO SCALE

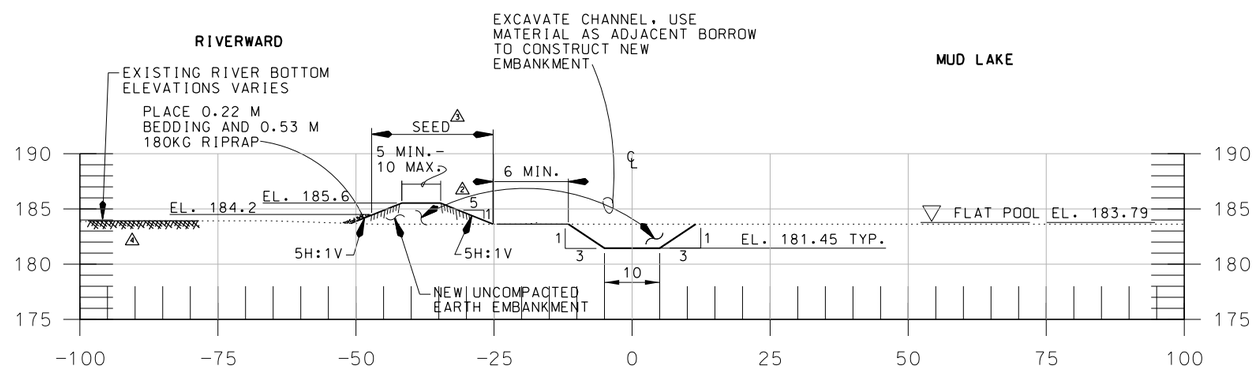

F
C5,C6,C12

RIPRAP BAND EROSION PROTECTION

STA 19+52A TO STA 29+31A

STA 14+76A TO STA 16+10A

NO SCALE

NOTES:

1. ALL SLOPES ON EMBANKMENTS SHALL BE 5 (MIN.) :1.
2. SEEDING SHALL EXTEND TO BOUNDARY OF RIPRAP OR NORMAL WATERLINE.
3. ABOVE ELEVATION 183.79 M, 0.53 M RIPRAP SHALL BE PLACED ON 0.22 M BEDDING STONE.
4. BELOW ELEVATION 183.79 M, 0.65 M RIPRAP SHALL BE PLACED ON 0.35 M BEDDING STONE.

ALL DISTANCES, MEASUREMENTS AND ELEVATIONS SHOWN ARE IN METERS UNLESS NOTED OTHERWISE.

US Army Corps of Engineers
Rock Island District

Symbol	Description	Date	Approved
4	AS CONSTRUCTED	8-11-06	RTN/RAP
3	AMD. #1-SPECIFICATION AMENDMENT	5-12-04	JRP/DJJ
2	AMD. #2-SLOPE LABEL CORRECTION	5-18-04	JRP/DJJ
1	AMD. #3-DIMENSION AND SEEDING CORRECTION	6-2-04	JRP/DJJ
0	MINER REVISION	5-9-05	JRP/RTN

Revisions

Designed By: RSN
Date: 21 SEP.2002
Drawn By: SDB
Scale: AS SHOWN
Checked By: MEM
Drawing Code: EP66
Reviewed By: SAK
Solicitation Number: DACW25-02-R-0008

U.S. ARMY ENGINEER DISTRICT
CORPS OF ENGINEERS
ROCK ISLAND, ILLINOIS

POOL 11 ISLANDS
HABITAT REHABILITATION
& ENHANCEMENT PROJECT
SUNFISH LAKE AND MUD LAKE

MUD LAKE
TYPICAL SECTIONS
D, E AND F

Sheet Reference Number:
PLATE 38

10:12:19 AM
c:\pw_work\rgmm\rd5edd11h\d0243039\d0AM_PLATE38.dgn

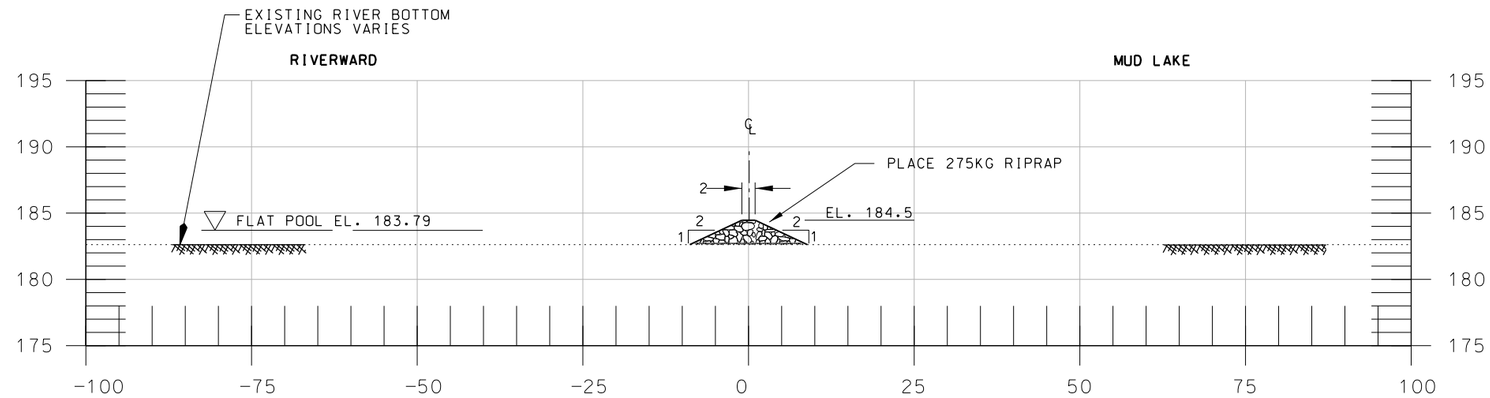

G
C6|C13 ROCK SPUR DIKE SECTION
NO SCALE

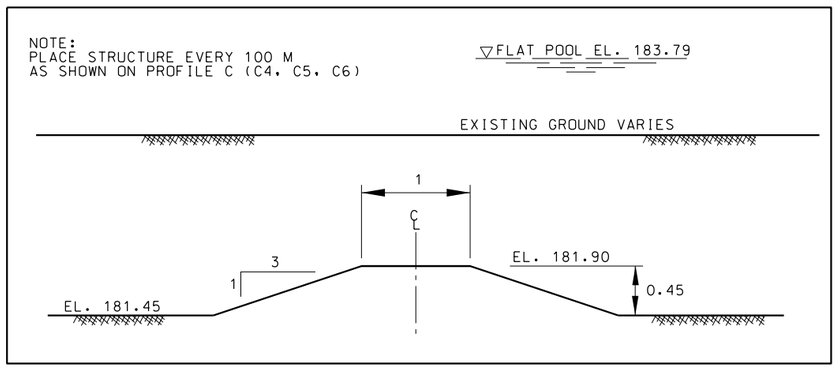

H
C4.C5.C6|C13 TYPICAL SECTION - DEPTH DIVERSITY STRUCTURE
NO SCALE

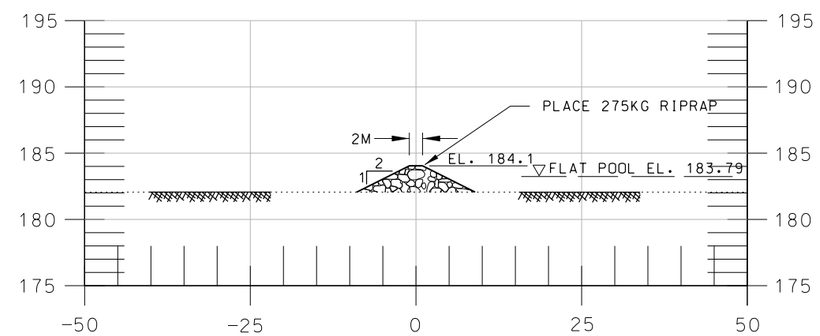

I
C5|C13 TYPICAL SECTION - RIPRAP EMBANKMENT
NO SCALE

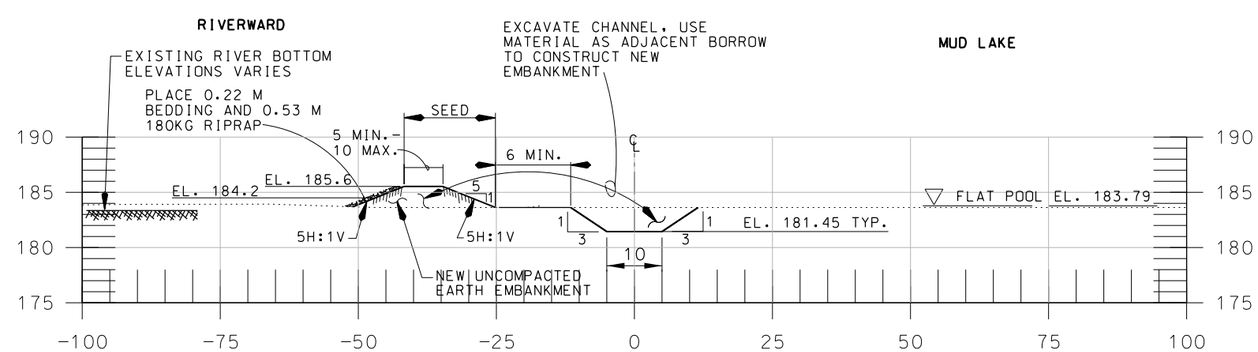

J
C4.C5|C13 TYPICAL SECTION-RIPRAP EMBANKMENT △3
NO SCALE

NOTES: △3

1. ALL SLOPES ON EMBANKMENTS SHALL BE 5 (MIN.) :1.
2. SEEDING SHALL EXTEND TO BOUNDARY OF RIPRAP OR NORMAL WATERLINE.
3. ABOVE ELEVATION 183.79 M, 0.53 M RIPRAP SHALL BE PLACED ON 0.22 M BEDDING STONE.
4. BELOW ELEVATION 183.79 M, 0.65 M RIPRAP SHALL BE PLACED ON 0.35 M BEDDING STONE.

ALL DISTANCES, MEASUREMENTS AND ELEVATIONS SHOWN ARE IN METERS UNLESS NOTED OTHERWISE.

US Army Corps of Engineers
Rock Island District

Symbol	Description	Date	Approved
△2	AS CONSTRUCTED	8-11-06	RTN/RAP
△1	AMD. #3-ADDED TYPICAL SECTION J AND NOTES	6-2-04	JRP/DJJ

Revisions

Designed By: RSN
Drawn By: GDB
Checked By: MEM
Reviewed By: RAP
Date: 21 SEP.2002
Scale: AS SHOWN
Drawing Code: EP66
Solicitation Number: DACW25-02-R-0008

U.S. ARMY ENGINEER DISTRICT
CORPS OF ENGINEERS
ROCK ISLAND, ILLINOIS

POOL 11 ISLANDS
HABITAT REHABILITATION
& ENHANCEMENT PROJECT
SUNFISH LAKE AND MUD LAKE
MUD LAKE
TYPICAL SECTIONS
G, H, I AND J

Sheet Reference Number:
PLATE 39

10:08:12 AM
c:\pw_working\mvr\m0seddlt\m4024303\m0&M_PLATES39.dgn

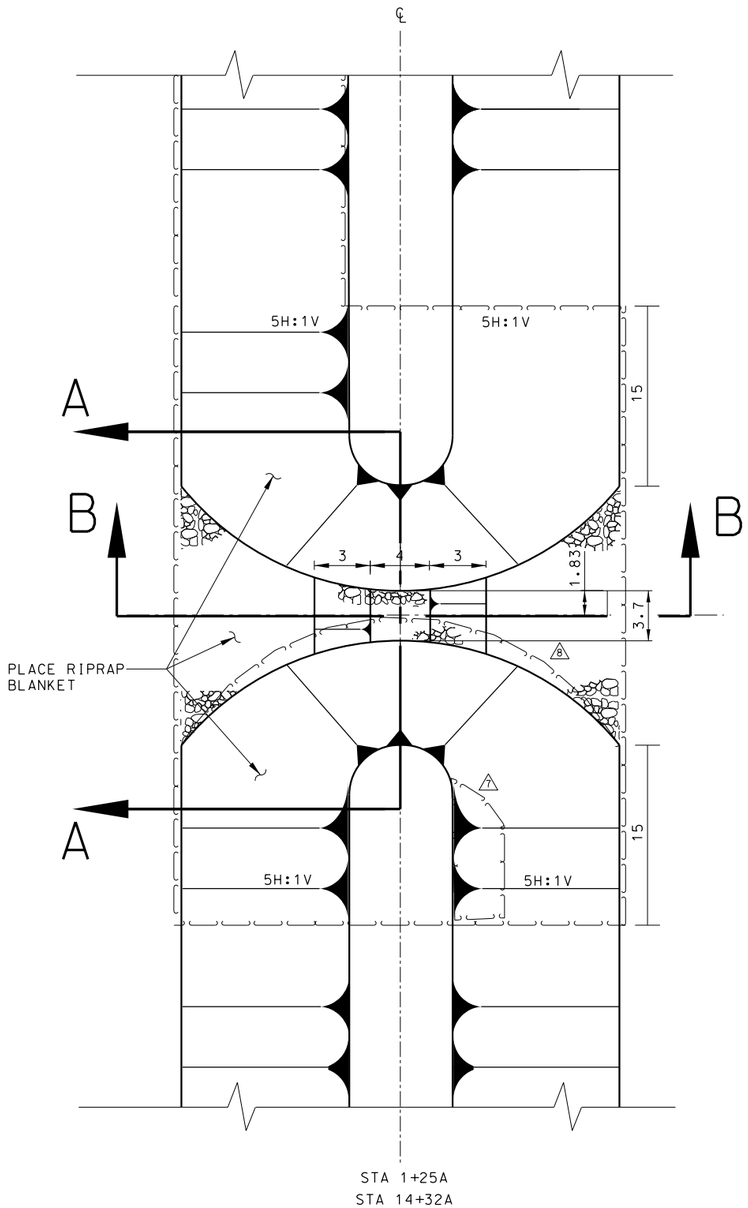

PLAN VIEW

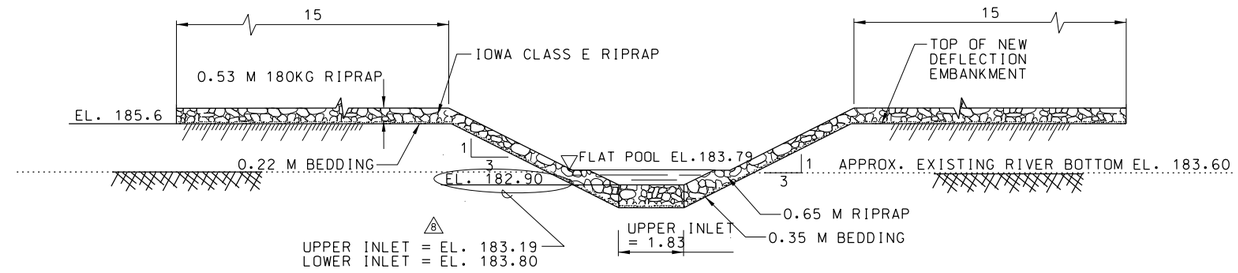

SECTION A-A FLOW INLET SECTION

NO SCALE

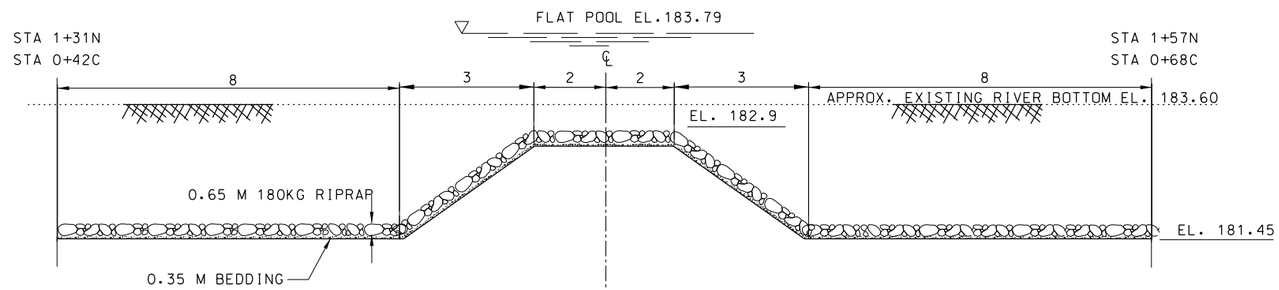

SECTION B-B FLOW INLET SECTION

NO SCALE

NOTES:

1. ABOVE ELEVATION 183.79 M, 0.53 M RIPRAP SHALL BE PLACED ON 0.22 M BEDDING STONE.
2. BELOW ELEVATION 183.79 M, 0.65 M RIPRAP SHALL BE PLACED ON 0.35 M BEDDING STONE.

ALL DISTANCES, MEASUREMENTS AND ELEVATIONS SHOWN ARE IN METERS UNLESS NOTED OTHERWISE.

US Army Corps of Engineers
Rock Island District

Symbol	Description	Date	Approved
2	AS CONSTRUCTED	8-11-06	RTN/RAP
1	MOD#8 - ADDITIONAL RIPRAP	5-2-06	RTN/RAP
0	MOD#7 - RIPRAP STOCKPILE	5-24-06	RTN/RAP

Revisions

Designed By: RTN
Drawn By: SDB
Checked By: MJA
Reviewed By: DJH
Date: 21 SEP-2002
Scale: AS SHOWN
Drawing Code: EP66
Solicitation Number: DACW25-02-R-0008

U.S. ARMY ENGINEER DISTRICT
CORPS OF ENGINEERS
ROCK ISLAND, ILLINOIS

POOL 11 ISLANDS
HABITAT REHABILITATION
& ENHANCEMENT PROJECT
SUNFISH LAKE AND MUD LAKE

TYPICAL FLOW INLET DETAILS

Sheet Reference Number:
PLATE 40

10:05:19 AM
c:\pw_working\emvr\b5ed0ff\#0024303\#03M_PLATE40.dgn

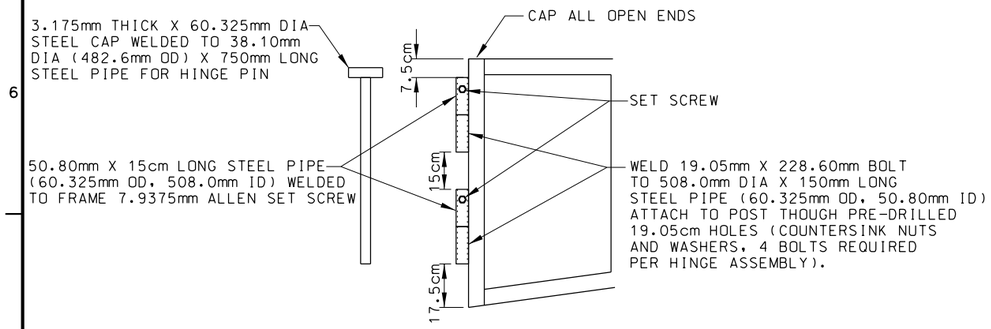

GATE HINGE ASSEMBLY

NO SCALE

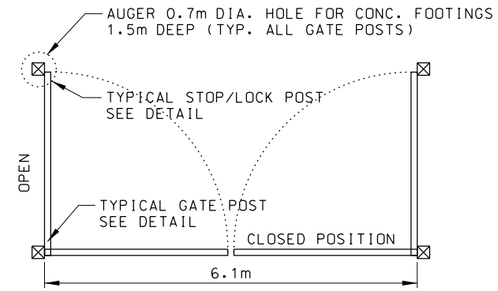

GATE LAYOUT

NO SCALE

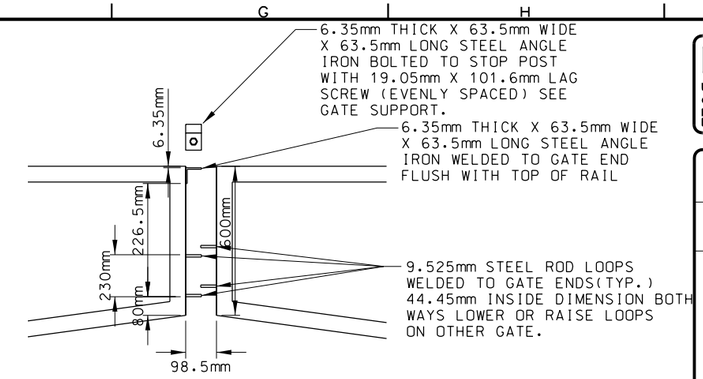

LOCK ASSEMBLY

NO SCALE

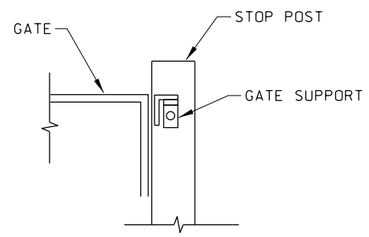

GATE SUPPORT

NO SCALE

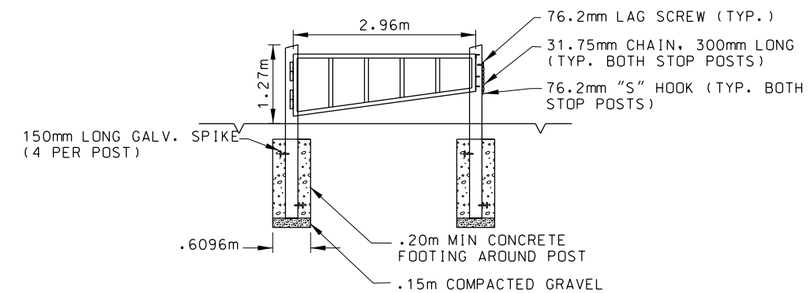

GATE OPEN POSITION

NO SCALE

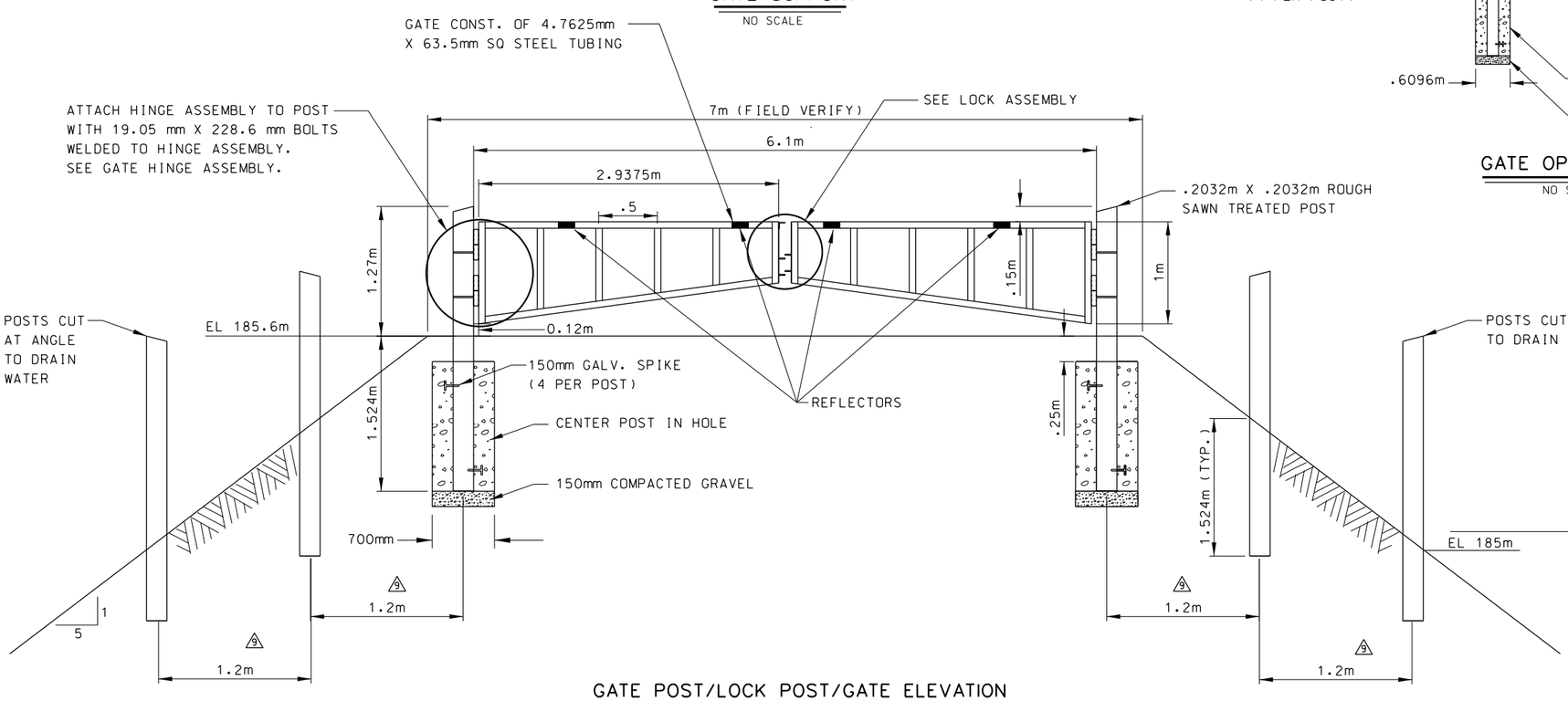

GATE POST/LOCK POST/GATE ELEVATION

NO SCALE

NOTES:

1. TIMBER POSTS: POSTS SHALL BE STAINED. POSTS SHALL BE CUT AT ANGLE TO DRAIN WATER. POSTS SHALL BE 0.2032 X 0.2032m ROUGH SAWN CCA LUMBER.
2. STEEL CONSTRUCTION: ALL WELDS SHALL BE GROUND SMOOTH AND EVEN. ALL STEEL SHALL BE HOT DIPPED GALVANIZED.
3. POST FURTHEST FROM THE CENTERLINE OF THE EMBANKMENT SHALL BE AT EL. 184.1.
4. POST NOT SET IN CONCRETE SHALL BE BACKFILLED AND COMPACTED.

ALL DISTANCES, MEASUREMENTS AND ELEVATIONS SHOWN ARE IN METERS UNLESS NOTED OTHERWISE.

US Army Corps of Engineers
Rock Island District

Symbol	Description	Date	Approved
9	REVISED AS CONSTRUCTED	8-11-06	RTN/RAP

Revisions

Designed By: RSN
Date: 21 SEP-2002
Drawn By: GJB
Scale: AS SHOWN
Checked By: WEM
Drawing Code: EP66
Reviewed By: GAW
Solicitation Number: DACW25-02-R-0008

U.S. ARMY ENGINEER DISTRICT
CORPS OF ENGINEERS
ROCK ISLAND, ILLINOIS

POOL 11 ISLANDS
HABITAT REHABILITATION
& ENHANCEMENT PROJECT
SUNFISH LAKE AND MUD LAKE

GATE DETAILS

Sheet Reference Number:
PLATE 41

10:16:02 AM
c:\pw_working\emr\d0243033\d0AM_PLATE41.dgn

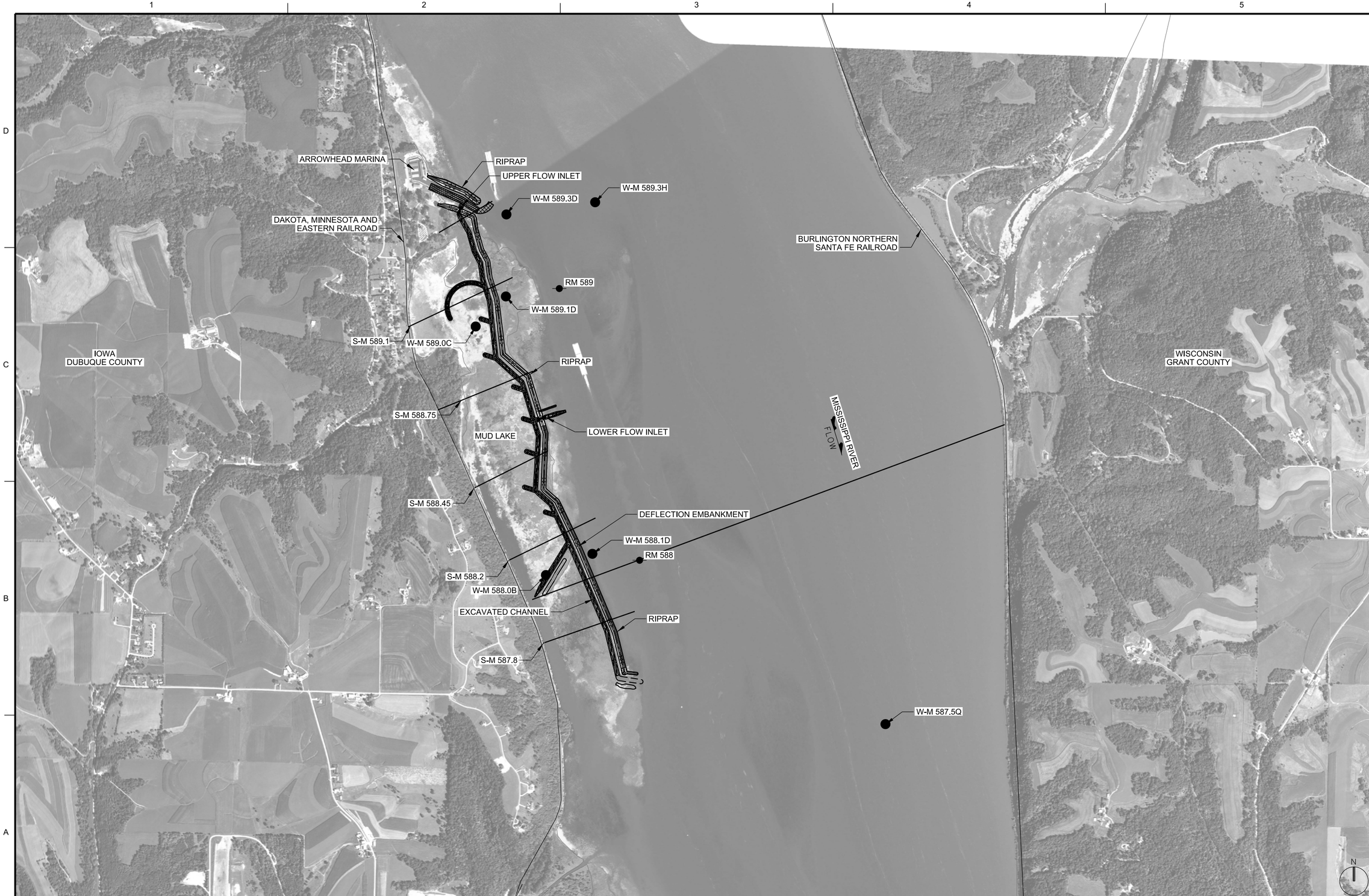

A1 MUD LAKE PLAN

SCALE: 1:100M 0 200 400

US Army Corps of Engineers®

MARK	DESCRIPTION	DATE	APPR.

U.S. ARMY CORPS OF ENGINEERS
ROCK ISLAND DISTRICT
ROCK ISLAND, ILLINOIS

DESIGNED BY: ADH
DWN BY: LLH
CKD BY:
SUBMITTED BY: HLA
PLOT SCALE: AS SHOWN
PLOT DATE:
SIZE: ANSI D
FILE NAME: PER C-101xxx.dgn
DATE:
SOLICITATION NO.:
CONTRACT NO.:
PROJECT CODE: PER

MISSISSIPPI RIVER
POOL 11 ISLAND
DUBUQUE CO. IA/GRANT CO. WI
POOL 11 ISLAND PERFORMANCE EVALUATION REPORT

MUD LAKE PLAN

PLATE 02

Sheet ID
C-101

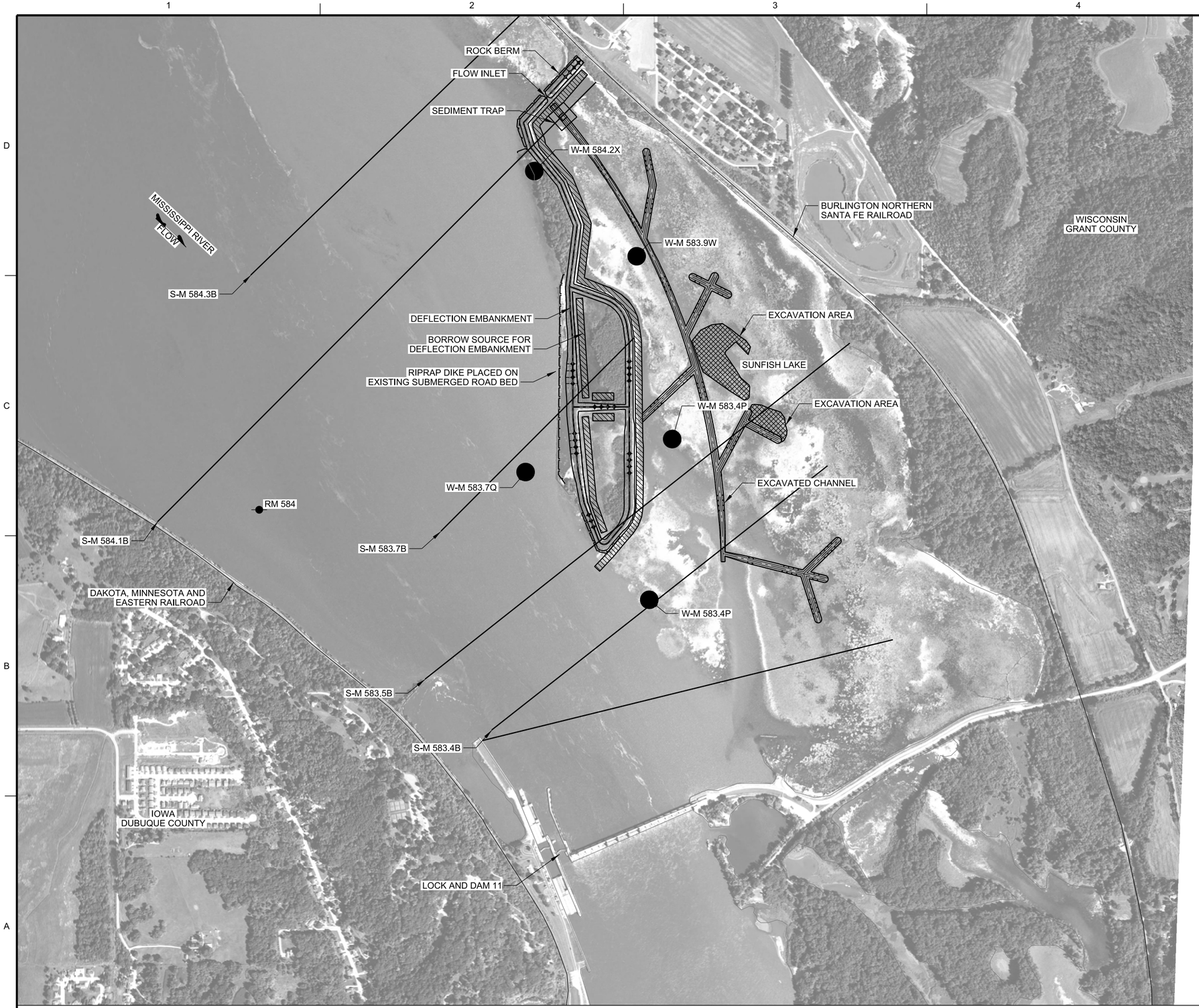

A1 SUNFISH LAKE PLAN

SCALE: 1:60M 0 120 240

US Army Corps of Engineers®

MARK	DESCRIPTION	DATE	APPR.

U.S. ARMY CORPS OF ENGINEERS
ROCK ISLAND DISTRICT
ROCK ISLAND, ILLINOIS

DESIGNED BY: ADH
DWN BY: LLH
CKD BY:
SUBMITTED BY:
HLA
PLOT SCALE: AS SHOWN
PLOT DATE:
SIZE: ANSI D
FILE NAME: PER_C-105xx.dgn
DATE:
SOLICITATION NO.:
CONTRACT NO.:
PROJECT CODE: PER

MISSISSIPPI RIVER
POOL 11 ISLAND
DUBUQUE CO, IA/GRANT CO, WI
POOL 11 ISLAND PERFORMANCE EVALUATION REPORT

SUNFISH LAKE PLAN

PLATE 06

Sheet ID
C-105

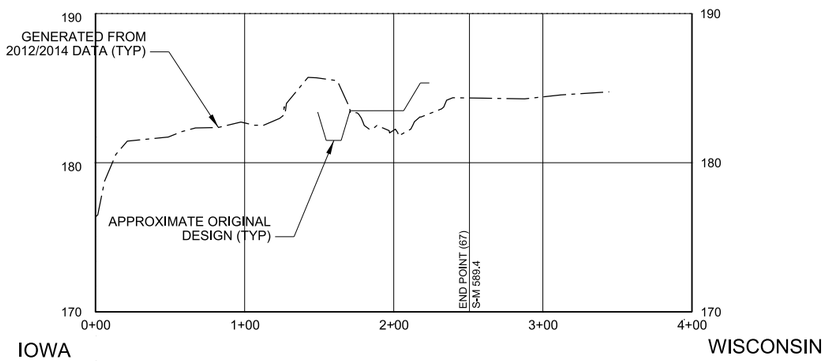

PART TRANSECT 67-68 @ RM 589.4

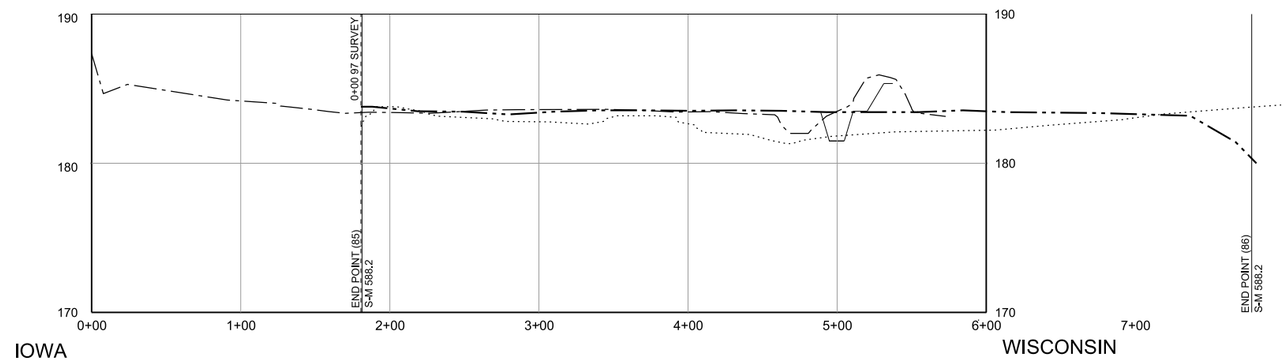

PART TRANSECT 85-86 @ RM 588.2

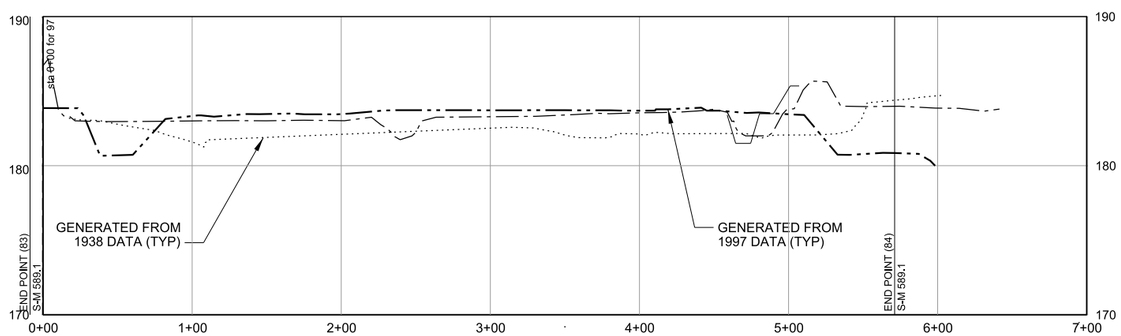

PART TRANSECT 83-84 @ RM 589.1

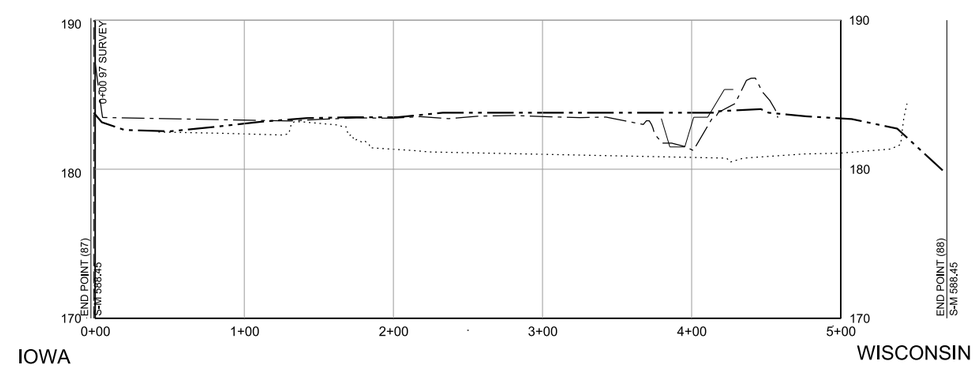

PART TRANSECT 87-88 @ RM 588.4

APPROXIMATE ORIGINAL DESIGN
GENERATED FROM 2012/2014 DATA
GENERATED FROM 1997 DATA
GENERATED FROM 1938 DATA

A1 MUD LAKE TRANSECTS

SCALE: 1:10M 0 20 40

US Army Corps of Engineers®

MARK	DESCRIPTION	DATE	APPR.

U.S. ARMY CORPS OF ENGINEERS
ROCK ISLAND DISTRICT
ROCK ISLAND, ILLINOIS

DESIGNED BY: ADH
DWN BY: LLH
CKD BY:
SUBMITTED BY: HLA
DATE:
SOLICITATION NO.:
CONTRACT NO.:
PLOT SCALE: AS SHOWN
PLOT DATE:
PROJECT CODE: PER
SIZE: ANSI D
FILE NAME: PER C-301xx.dgn

MISSISSIPPI RIVER
POOL 11 ISLAND
DUBUQUE CO, IA/GRANT CO, WI
POOL 11 ISLAND PERFORMANCE EVALUATION REPORT

MUD LAKE TRANSECTS

PLATE 09

Sheet ID
C-301

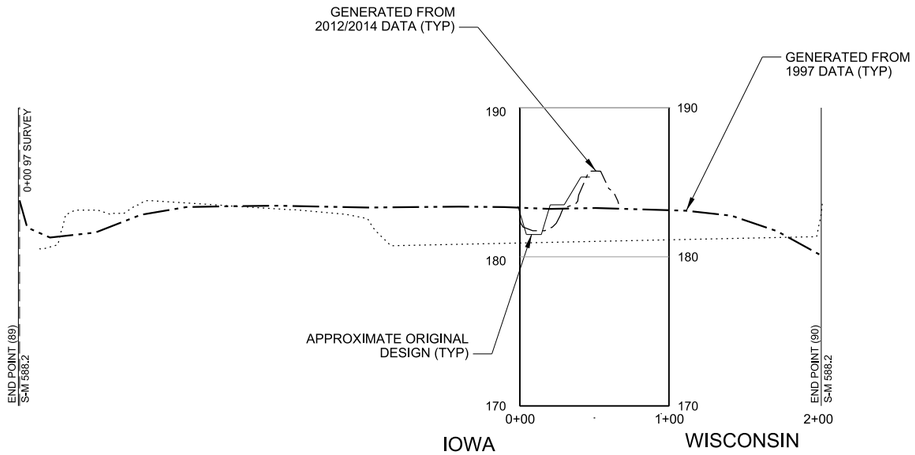

PART OF TRANSECT 89-90 @ RM 588.2

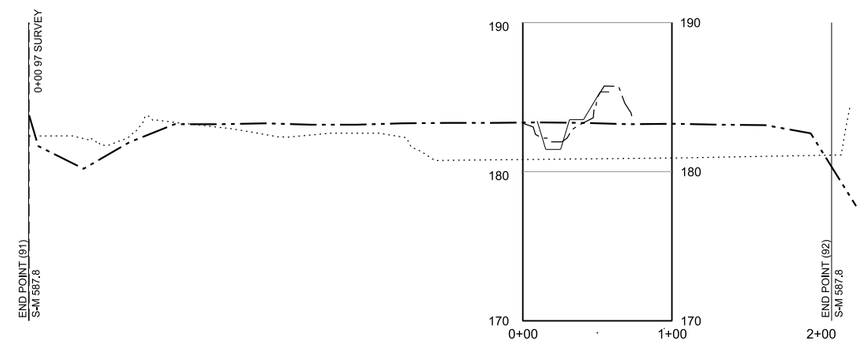

PART OF TRANSECT 91-92 @ RM 587.8

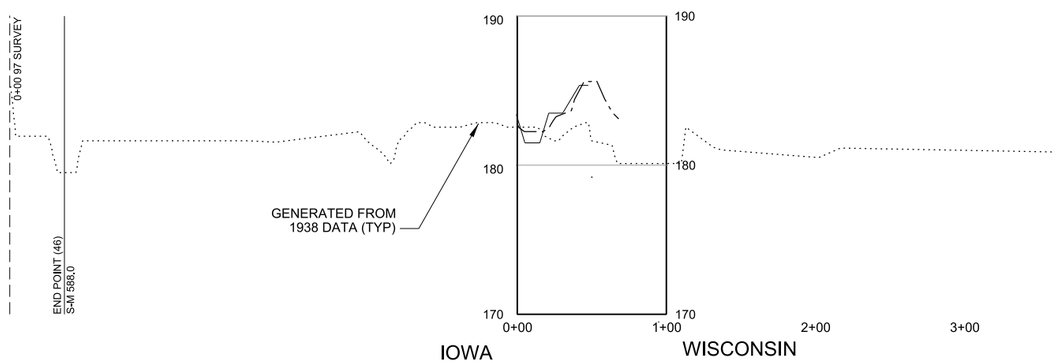

PART OF TRANSECT 46-45 @ RM 588.0

APPROXIMATE ORIGINAL DESIGN
GENERATED FROM 2012/2014 DATA
GENERATED FROM 1997 DATA
GENERATED FROM 1938 DATA

A1 MUD LAKE TRANSECTS

SCALE: 1:10M 0 20 40

US Army Corps of Engineers®

MARK	DESCRIPTION	DATE	APPR.

U.S. ARMY CORPS OF ENGINEERS
ROCK ISLAND DISTRICT
ROCK ISLAND, ILLINOIS

DESIGNED BY: ADH
DWN BY: LLH
CKD BY:
SUBMITTED BY: HLA
PLOT SCALE: AS SHOWN
PLOT DATE:
SIZE: ANSI D
FILE NAME: PER C-302xx.dgn
DATE:
SOLICITATION NO.:
CONTRACT NO.:
PROJECT CODE: PER

MISSISSIPPI RIVER
POOL 11 ISLAND
DUBUQUE CO, IA/GRANT CO, WI
POOL 11 ISLAND PERFORMANCE EVALUATION REPORT

MUD LAKE TRANSECTS

PLATE 10

Sheet ID
C-302

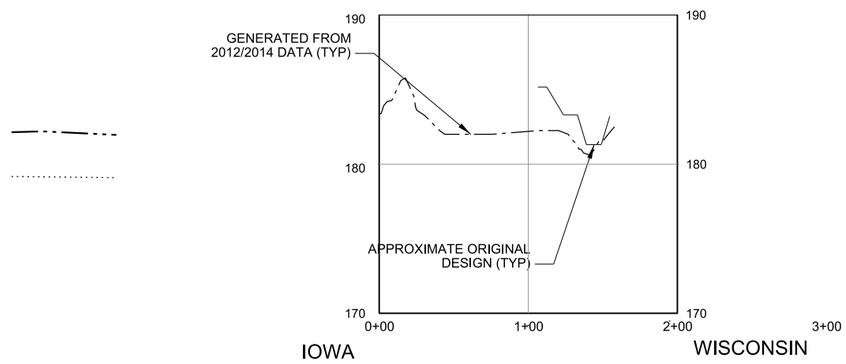

PART OF TRANSECT 30-29 @ RM 584.1

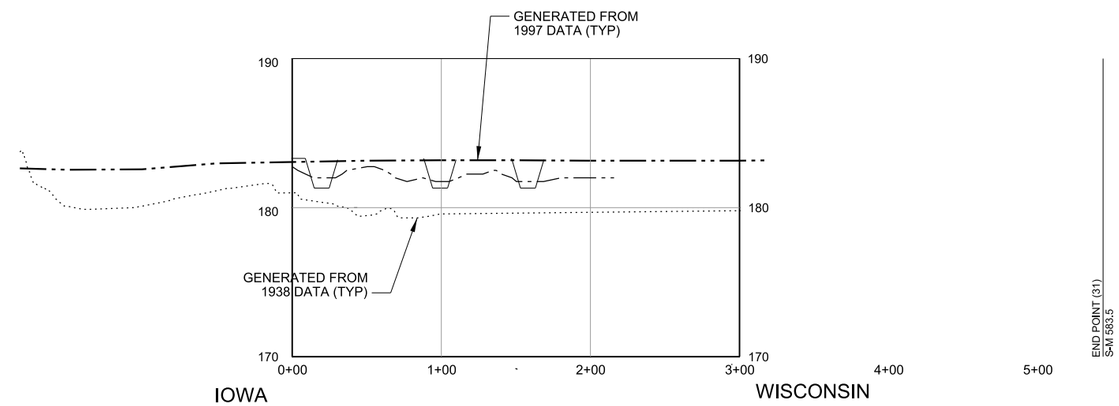

PART OF TRANSECT 32-31 @ RM 583.5

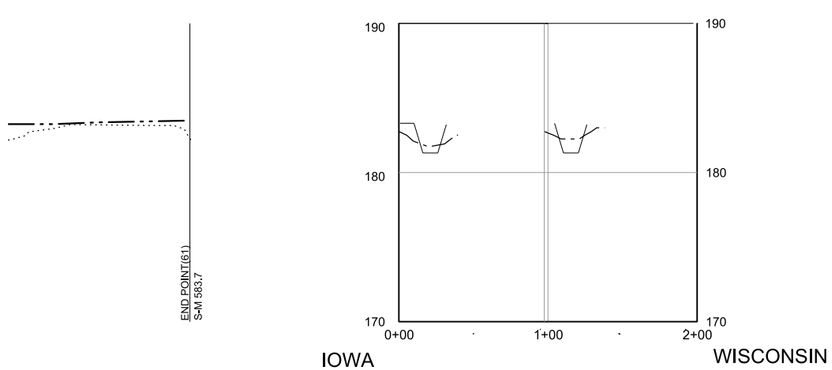

PART OF TRANSECT 61-62 @ RM 583.7

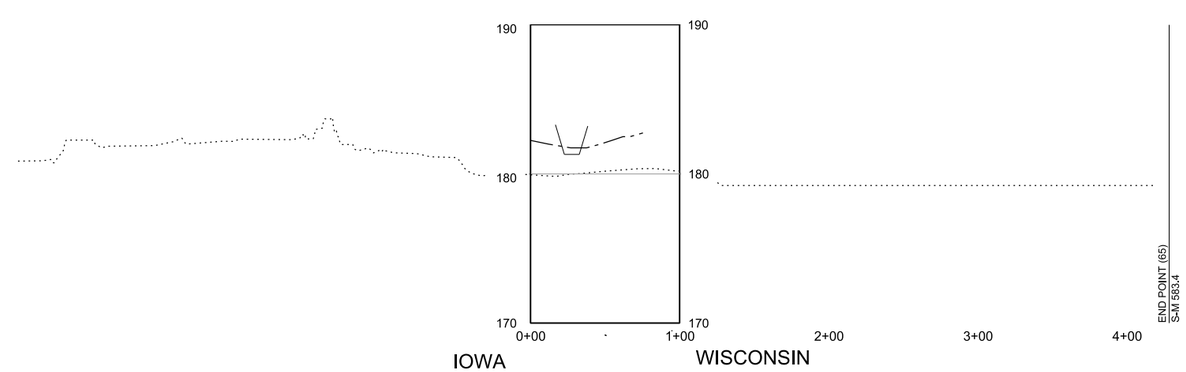

PART OF TRANSECT 66-65 @ RM 583.4

APPROXIMATE ORIGINAL DESIGN
GENERATED FROM 2012/2014 DATA
GENERATED FROM 1997 DATA
GENERATED FROM 1938 DATA

A1 SUNFISH LAKE TRANSECTS

SCALE: 1:10M 0 20 40

US Army Corps of Engineers®

MARK	DESCRIPTION	DATE	APPR.

U.S. ARMY CORPS OF ENGINEERS
ROCK ISLAND DISTRICT
ROCK ISLAND, ILLINOIS

DESIGNED BY: ADH
DWN BY: LLH
CKD BY:
SUBMITTED BY: HLA
SIZE: ANSI D
FILE NAME: PER C-303xxx.dgn
PLOT SCALE: AS SHOWN
PLOT DATE:
DATE:
SOLICITATION NO.:
CONTRACT NO.:
PROJECT CODE: PER

MISSISSIPPI RIVER
POOL 11 ISLAND
DUBUQUE CO, IA/GRANT CO, WI
POOL 11 ISLAND PERFORMANCE EVALUATION REPORT

SUNFISH LAKE TRANSECTS

PLATE 11

Sheet ID
C-303